Helvine

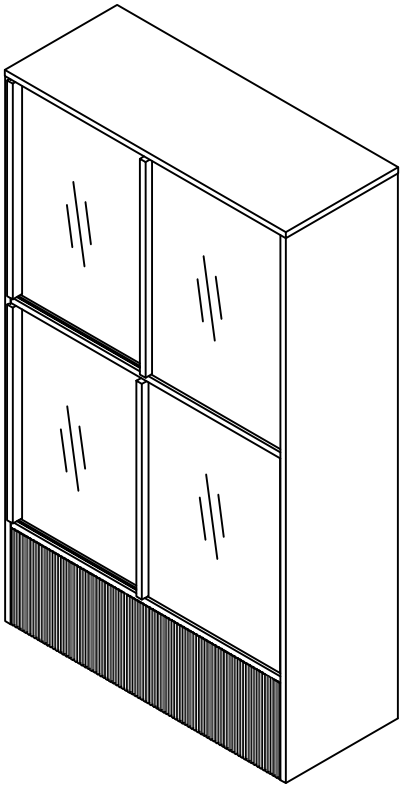

Kave

ED02

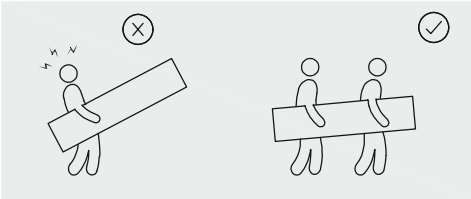

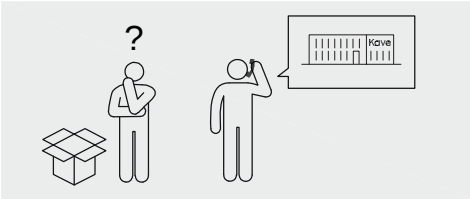
?
Kave

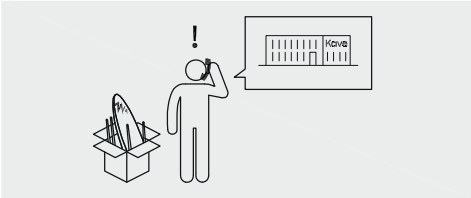
!
Kave

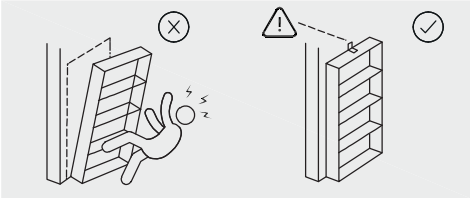

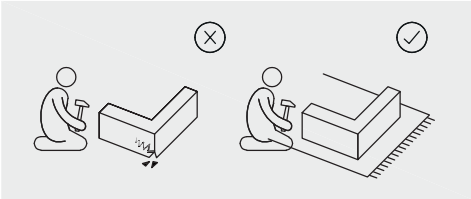

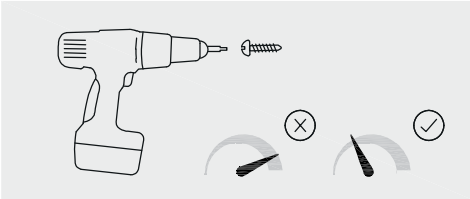

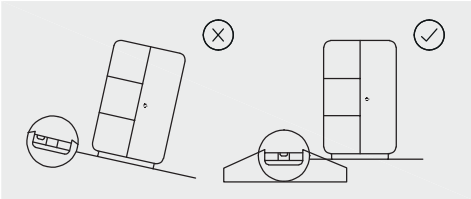

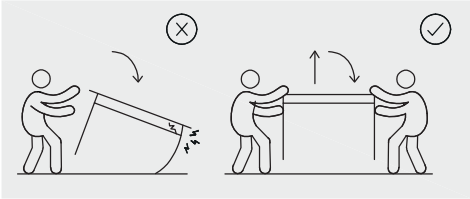

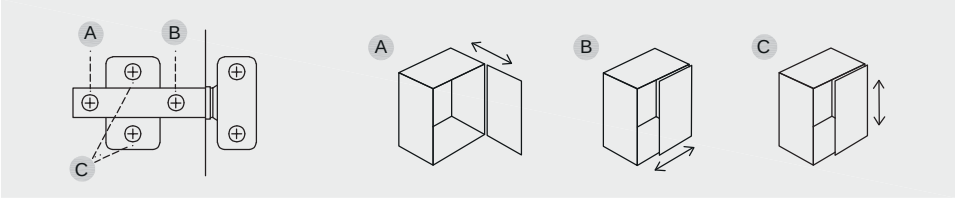
A
B
C
A
B
C

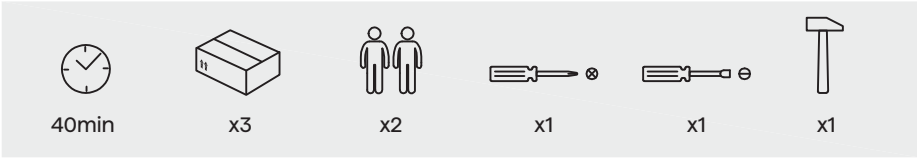
40min
x3
x2
x1
x1
x1

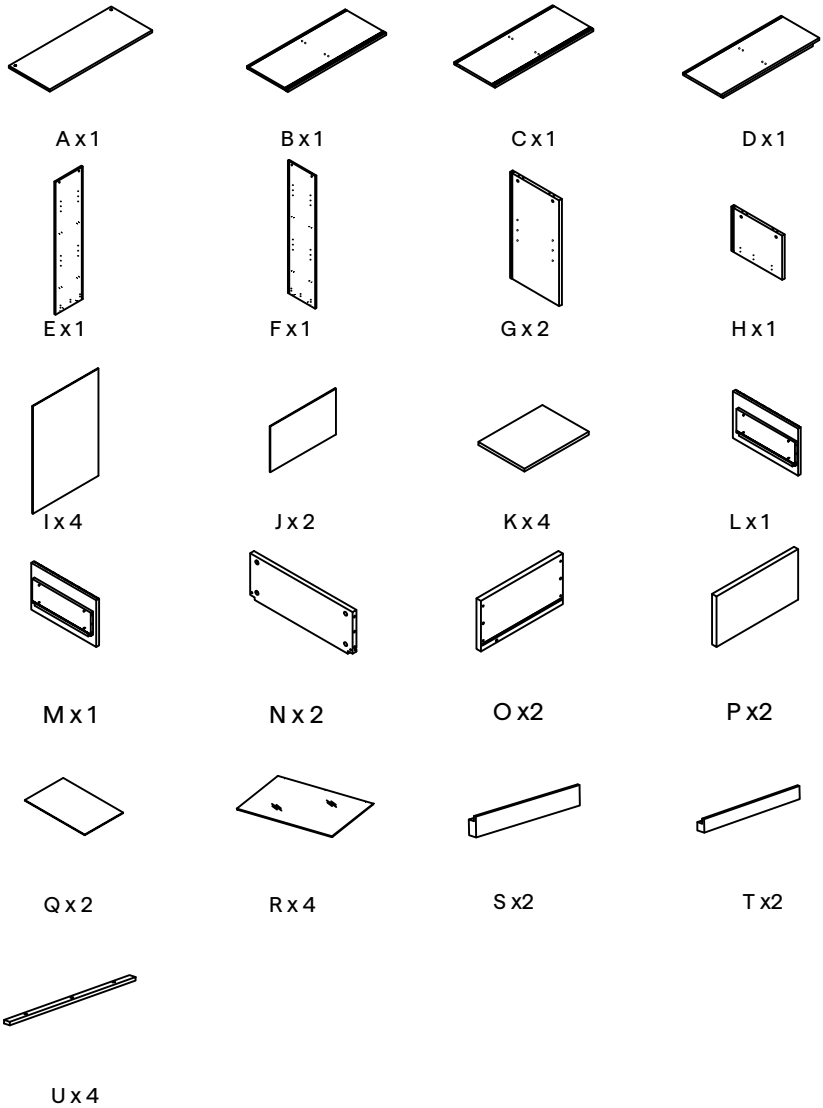
A x 1
B x 1
C x 1
D x 1
E x 1
F x 1
G x 2
H x 1
I x 4
J x 2
K x 4
L x 1
M x 1
N x 2
O x2
P x2
Q x 2
R x 4
S x2
T x2
U x 4

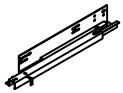

V x 2

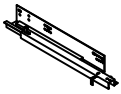

W x 2

X x 24
Ø3.5x15mm

Y x 38

Z x 38

AA x 36
8x30mm

AB x 8
M6x16mm

AC x 6
7x38mm

AD x 1
M4

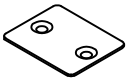

AE x 4

AF x 32

AG x 32
3.0x18mm

AH x 16
Ø6x19mm

AI x 12
M4x20mm

AJ x 24

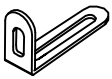

AK x 2

AL x 2
Ø8x38mm

AM x 2
4x38mm

AN x 2
M6x12mm

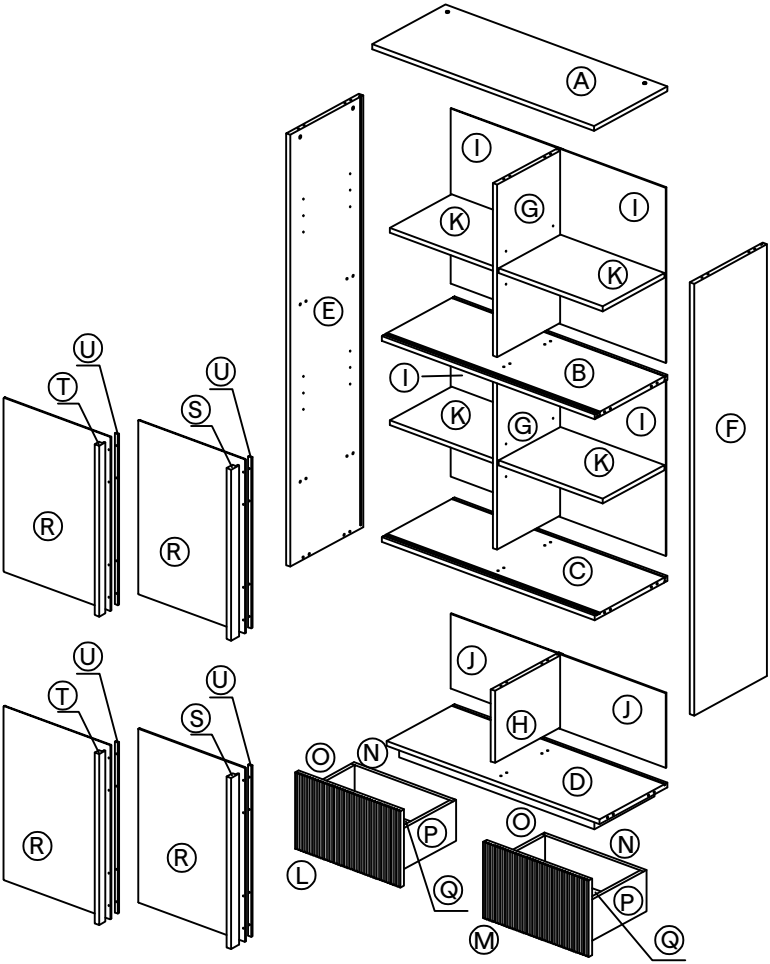
A
I
G
I
K
K
E
B
I
K
G
I
K
F
C
U
T
R
U
S
R
J
H
J
D
U
T
R
U
S
R
O
N
P
L
Q
O
N
P
M
Q

1

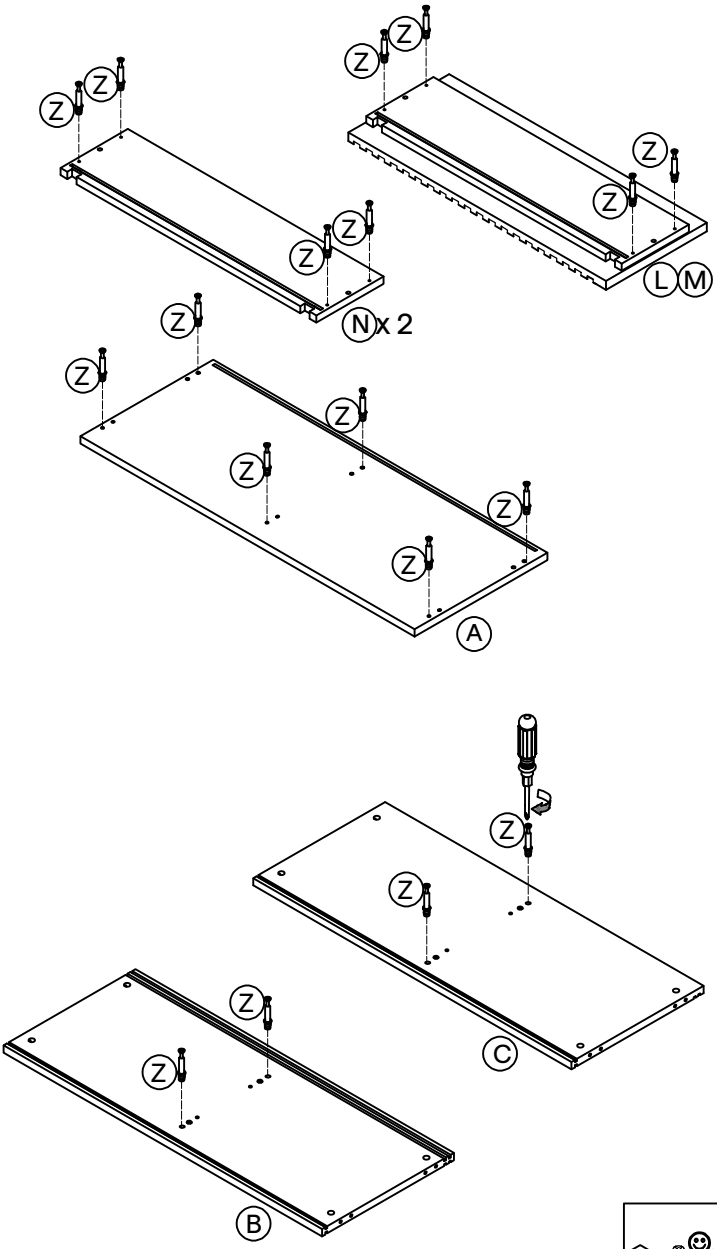

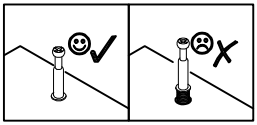

2

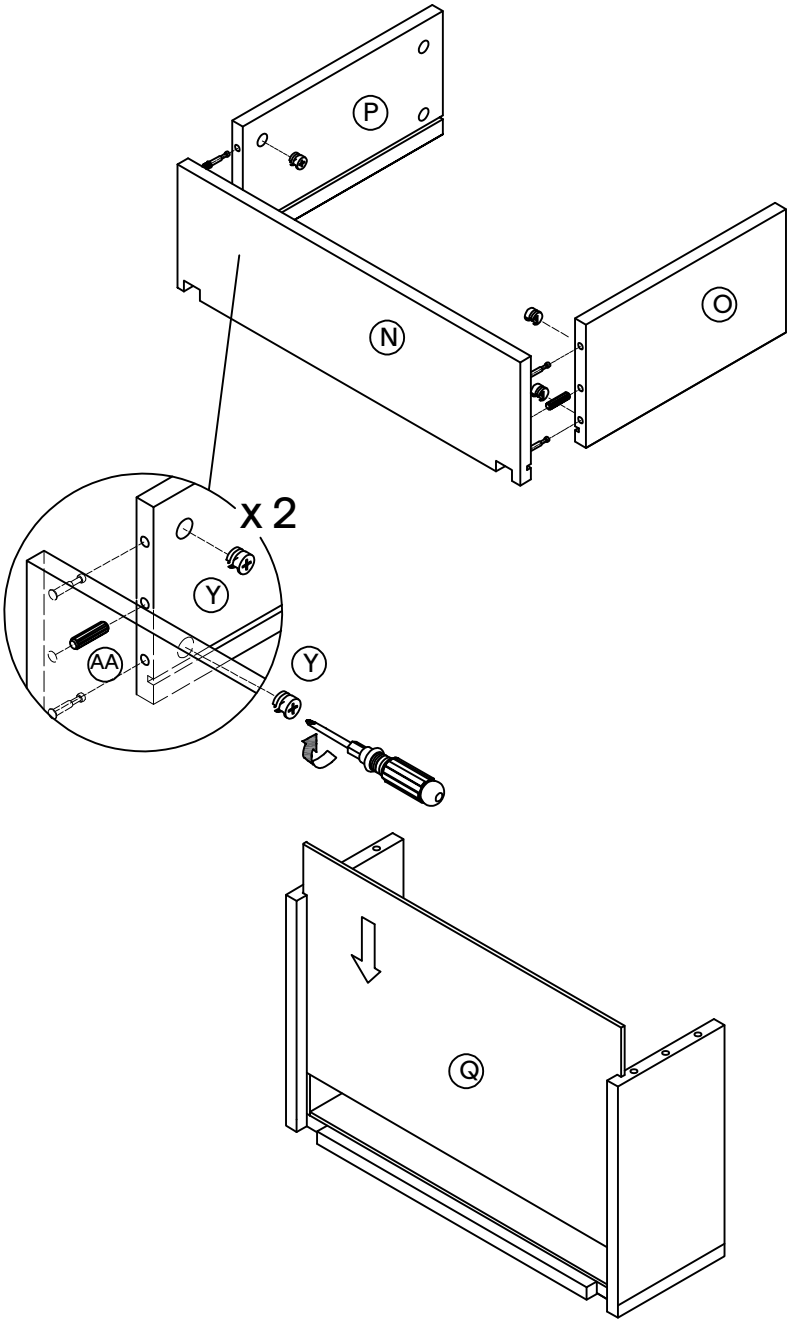

x 2

3

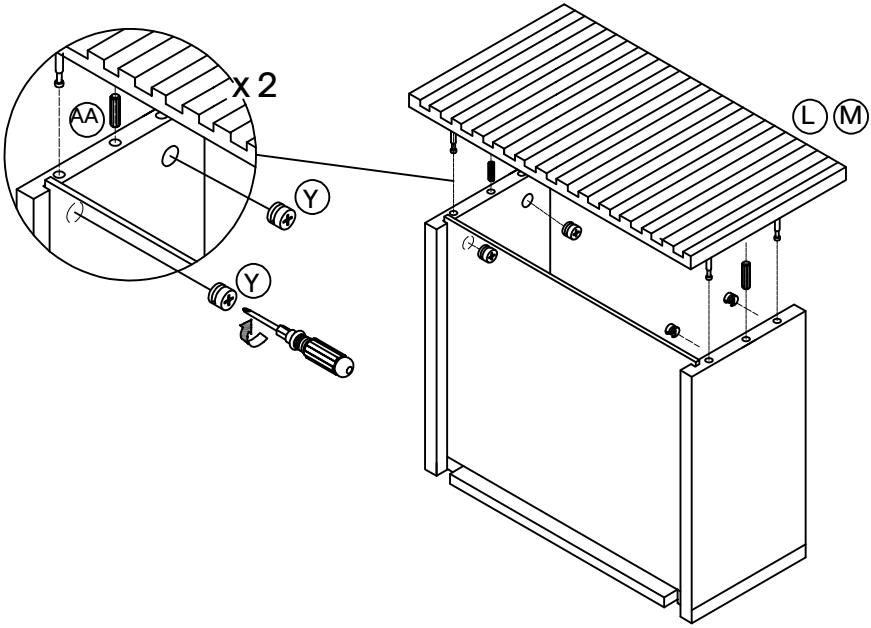

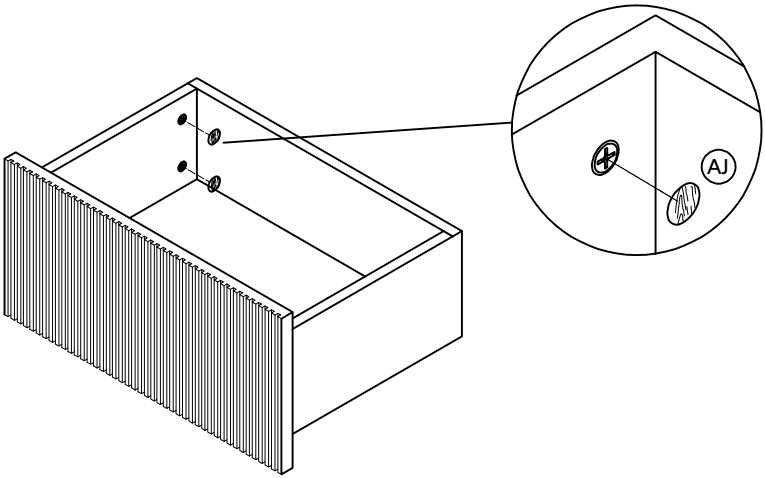

x 2

4

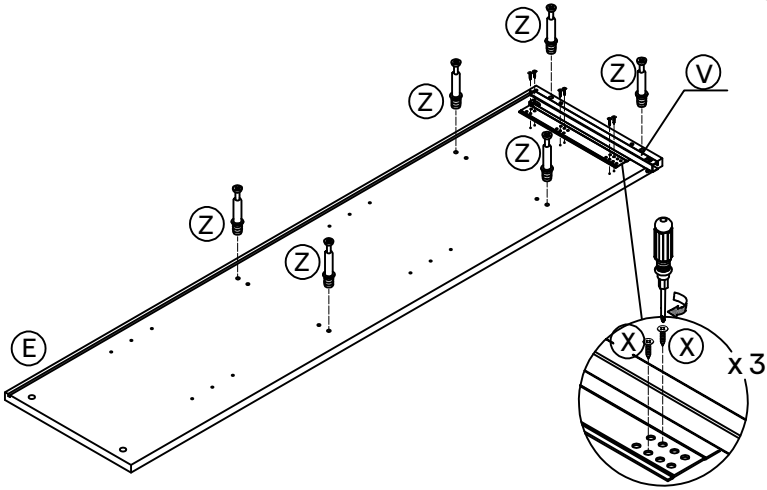

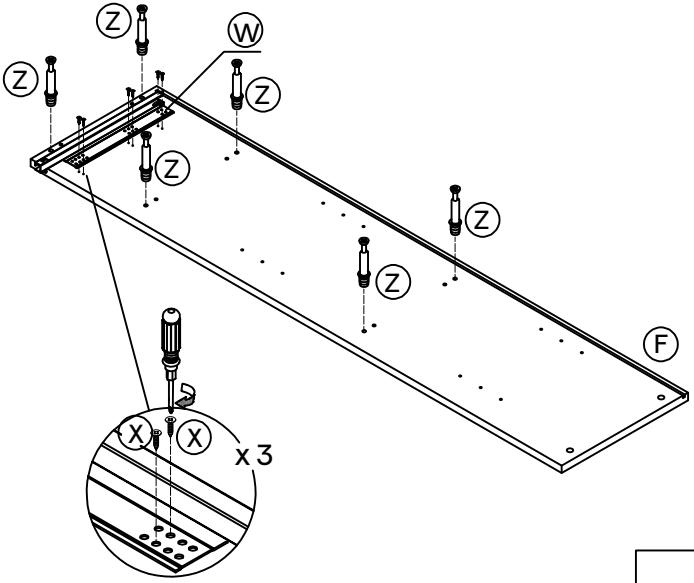

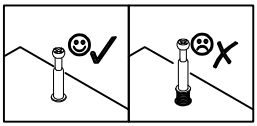

5

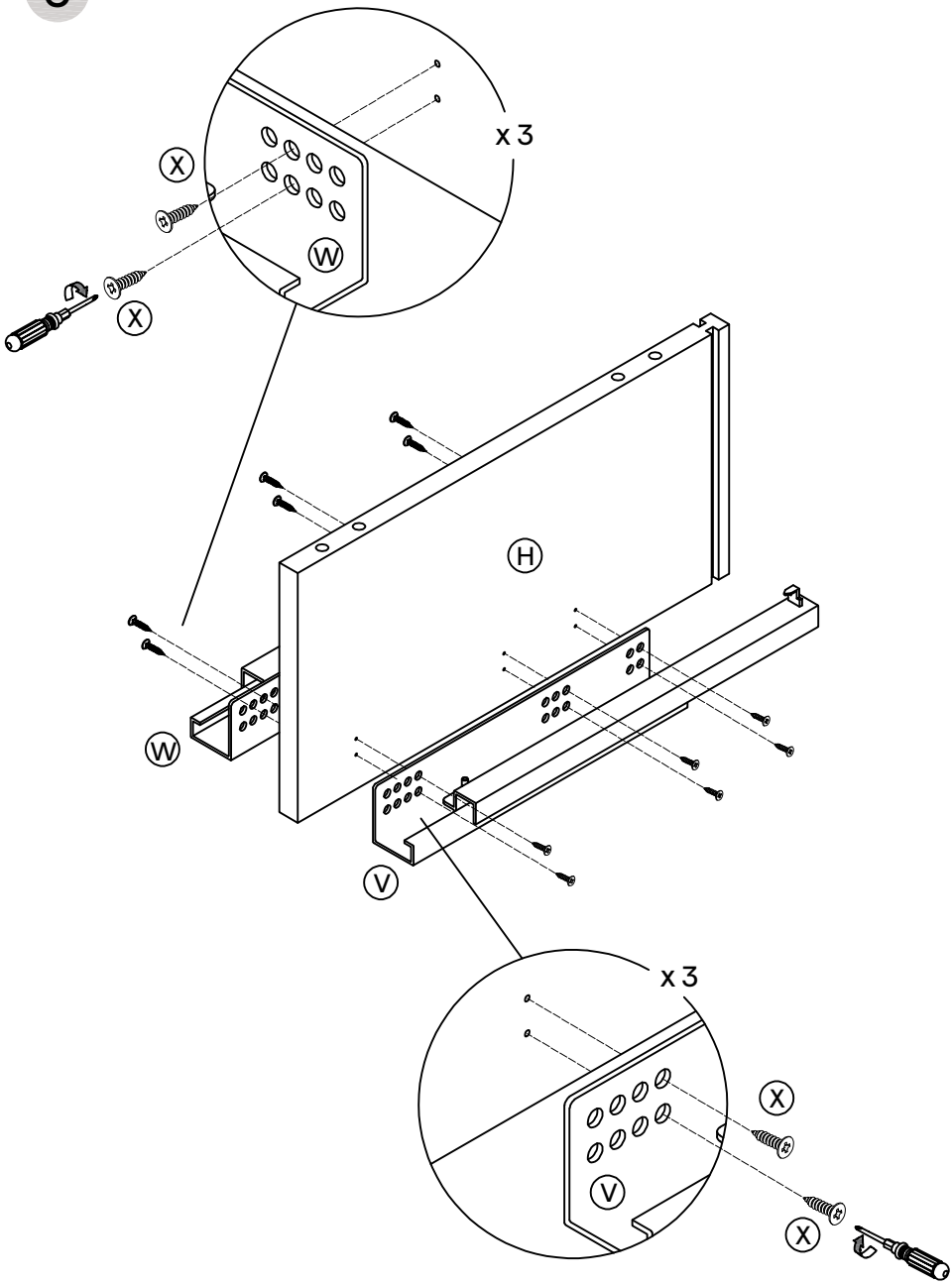

6

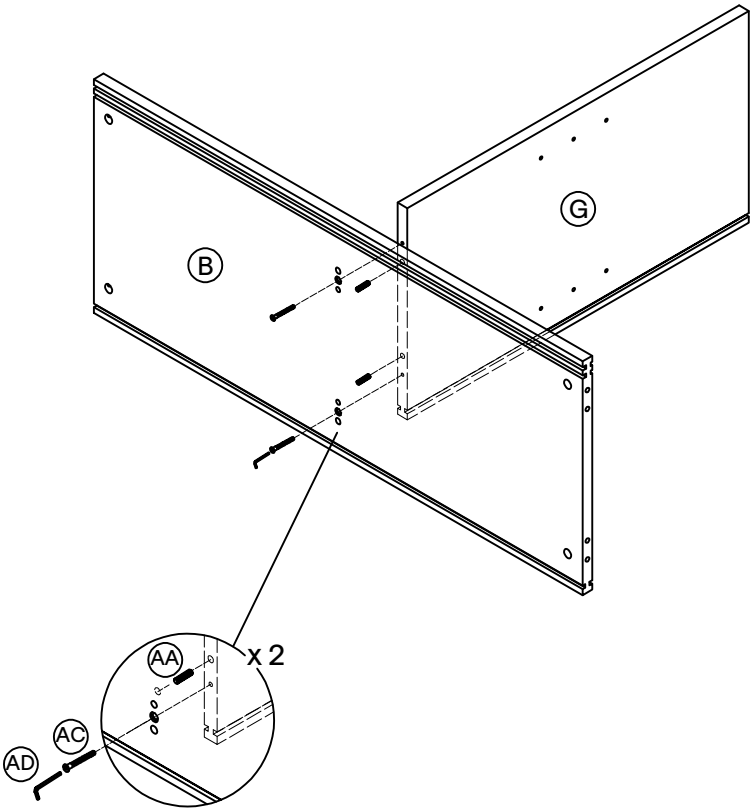

7

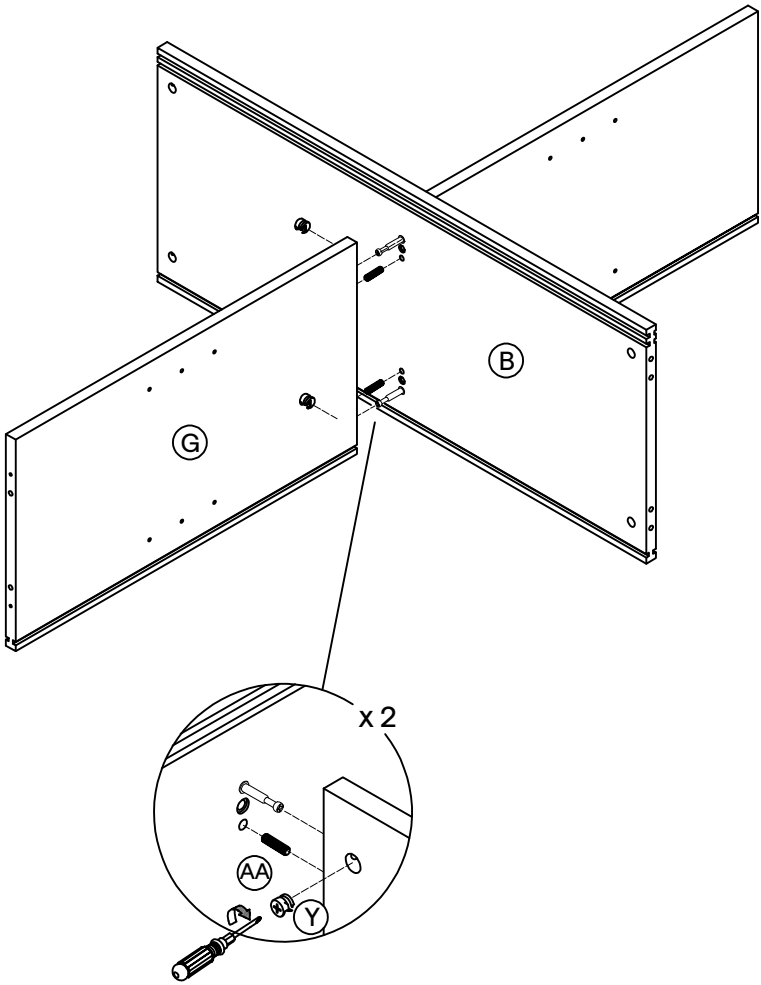

8

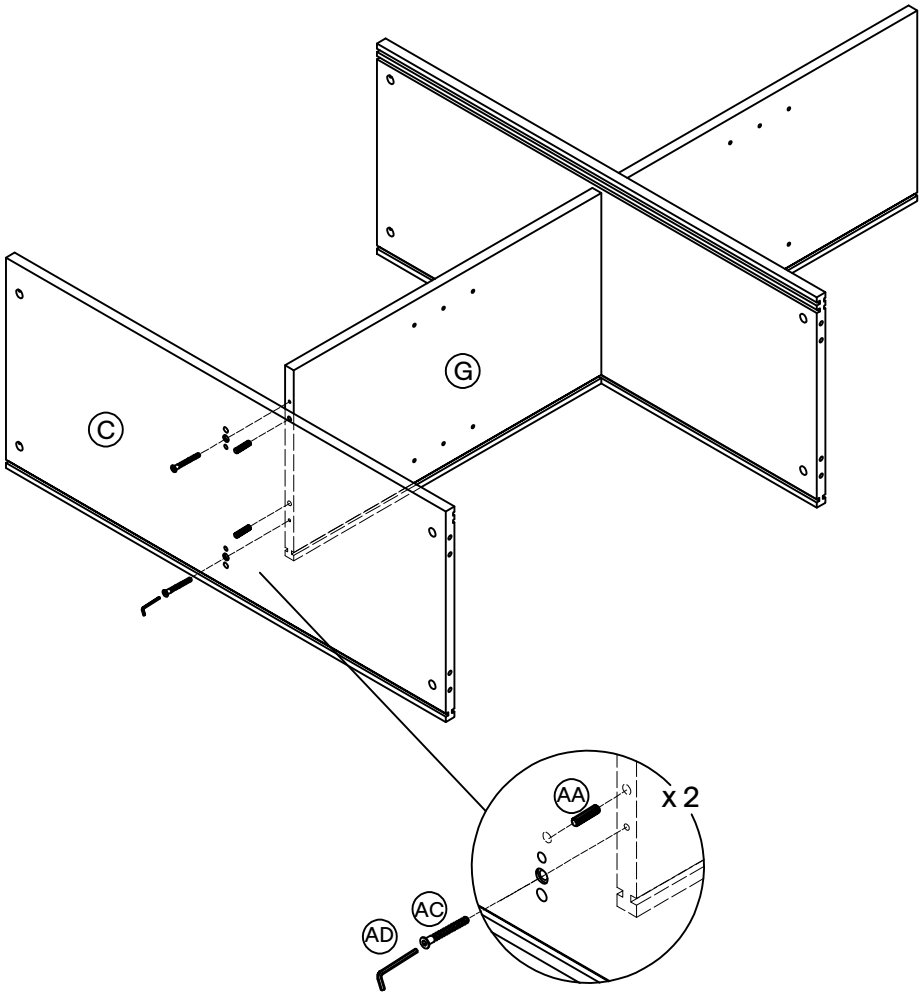

9

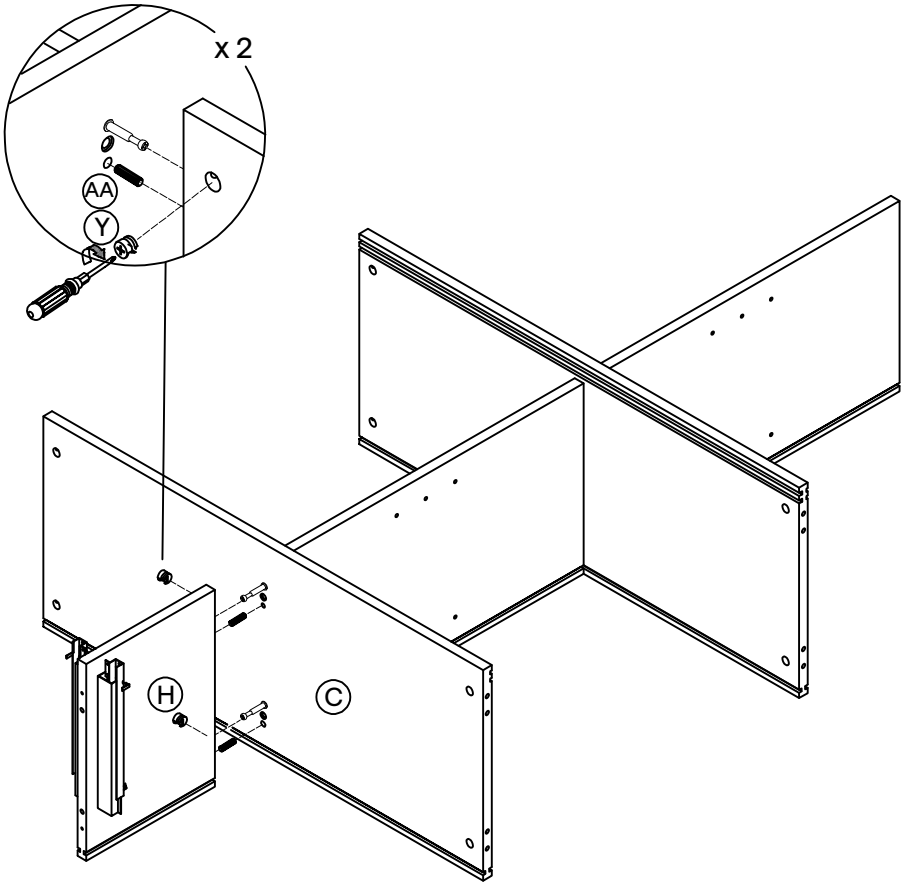

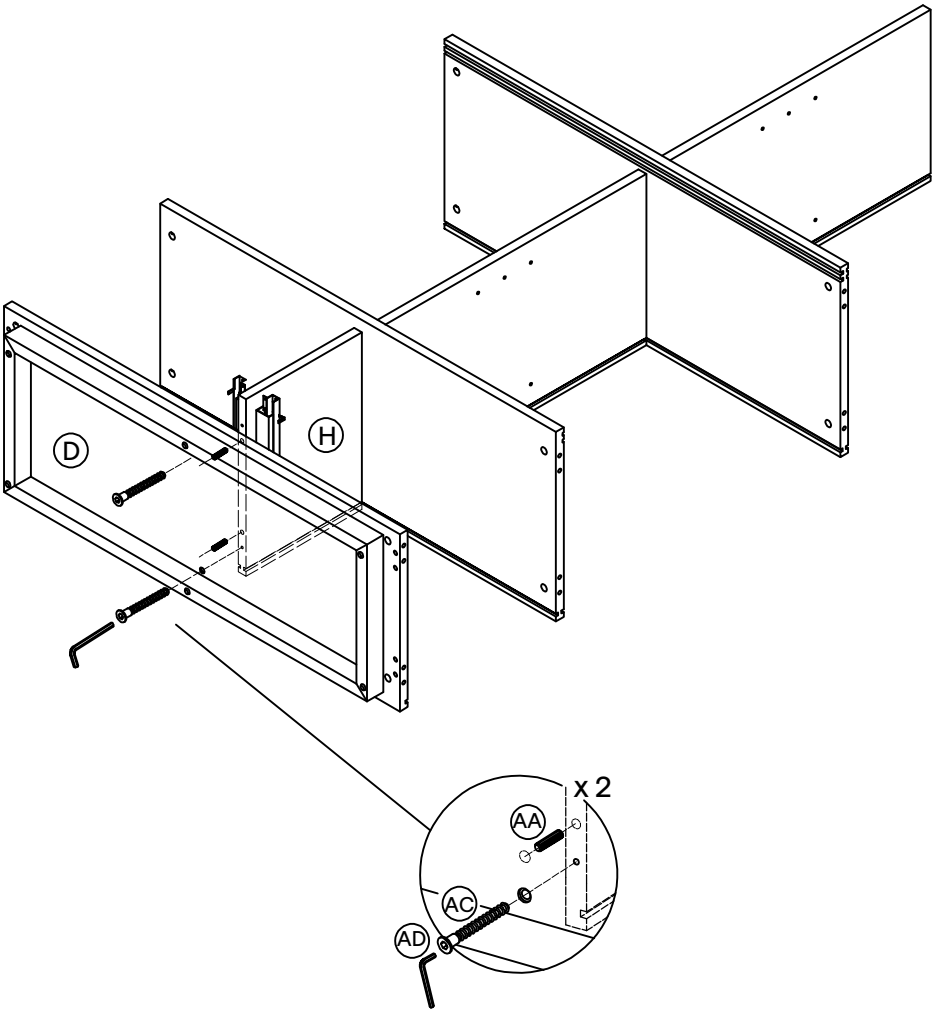
D
H
x 2
AA
AC
AD

11

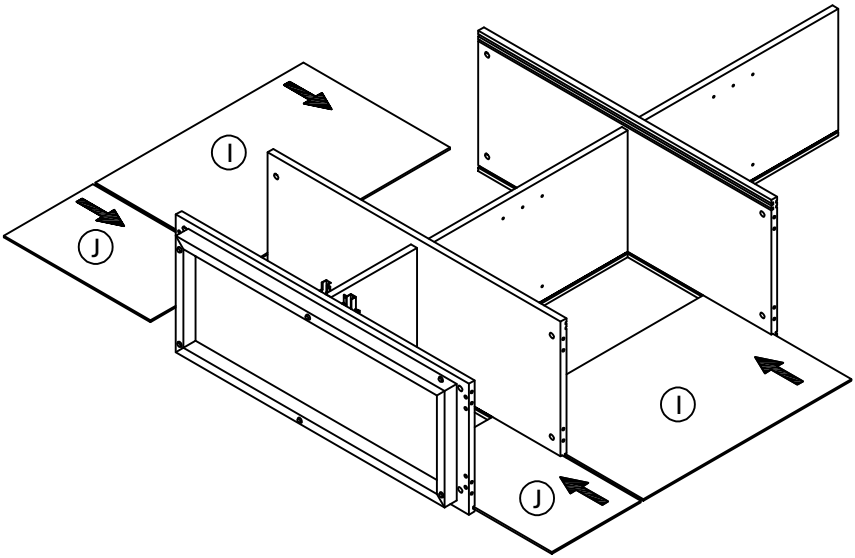

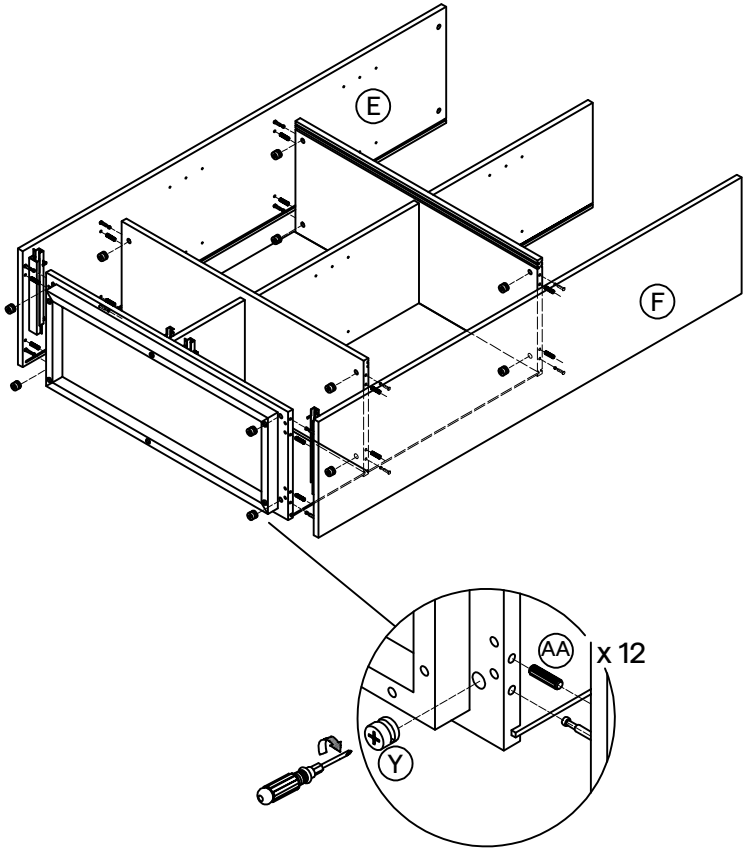
E
F
AA
x 12
Y

13

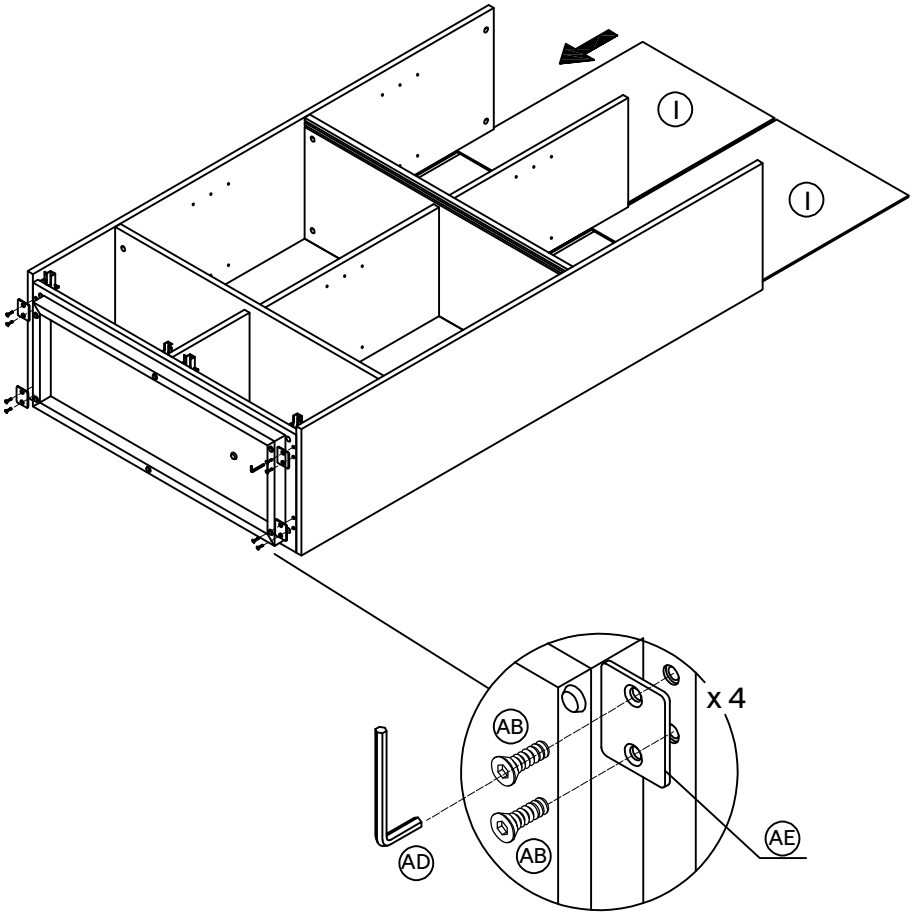

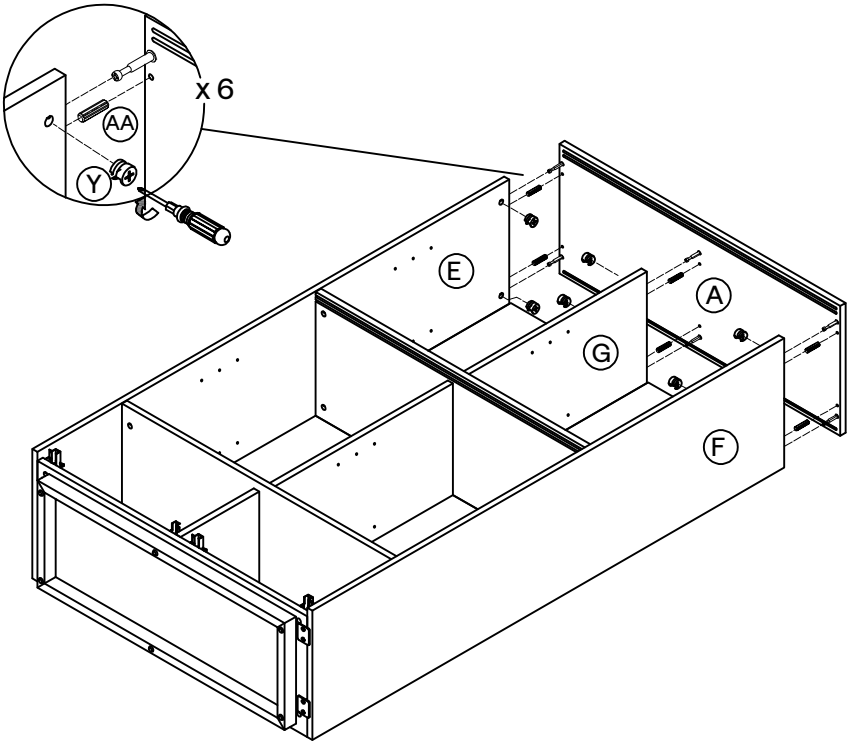
x 6
AA
Y
E
A
G
F

15

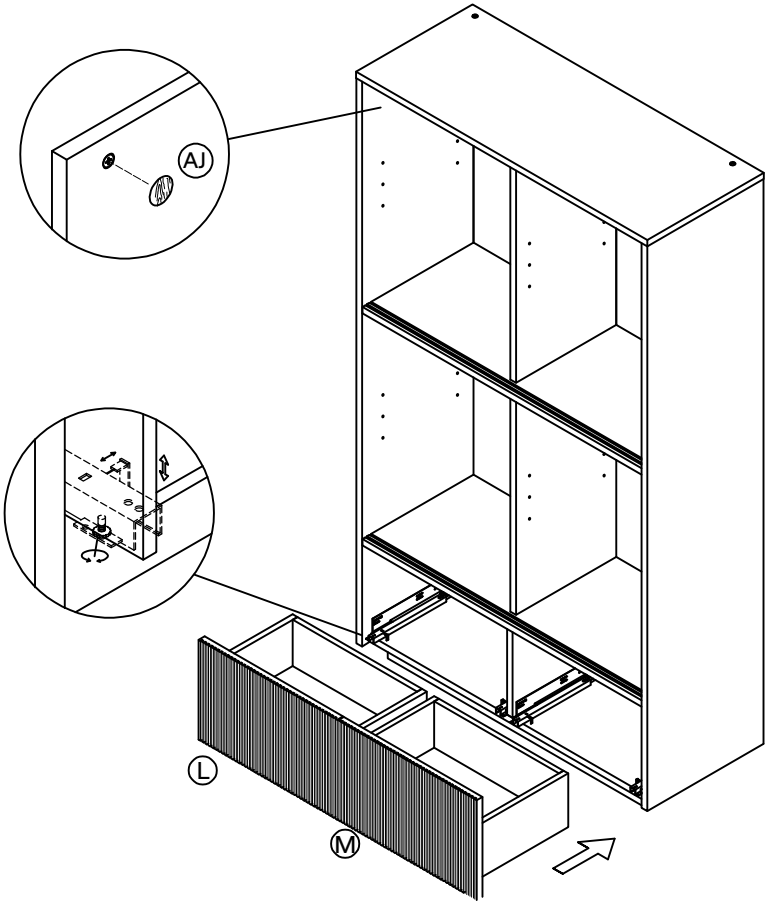

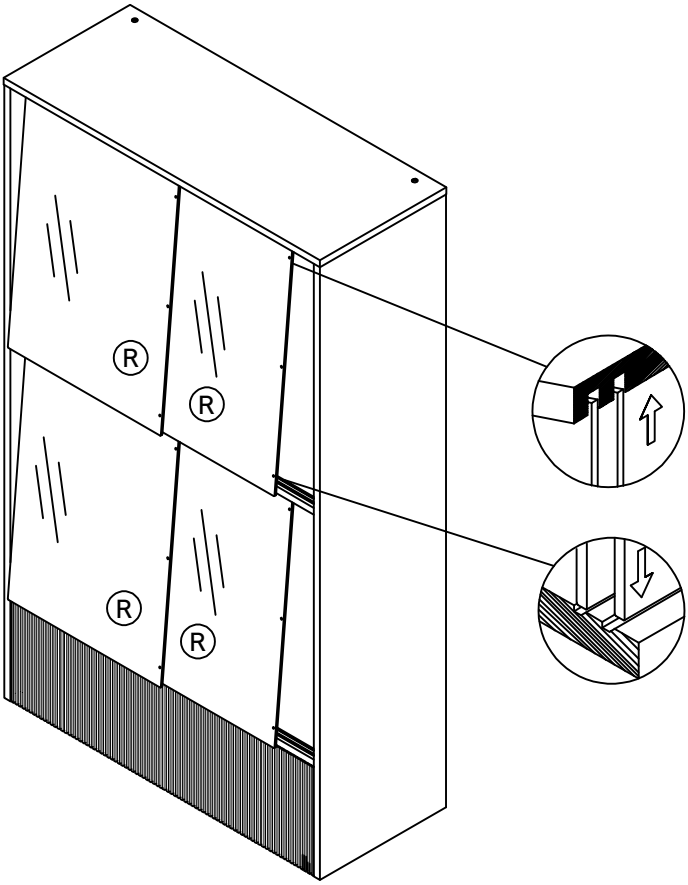
R
R
R
R

17

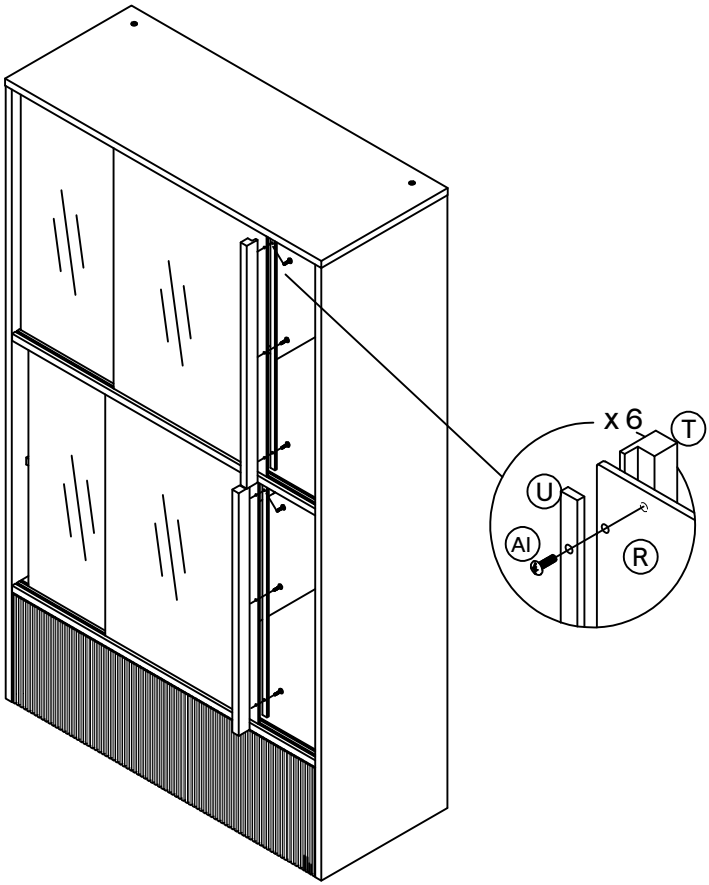

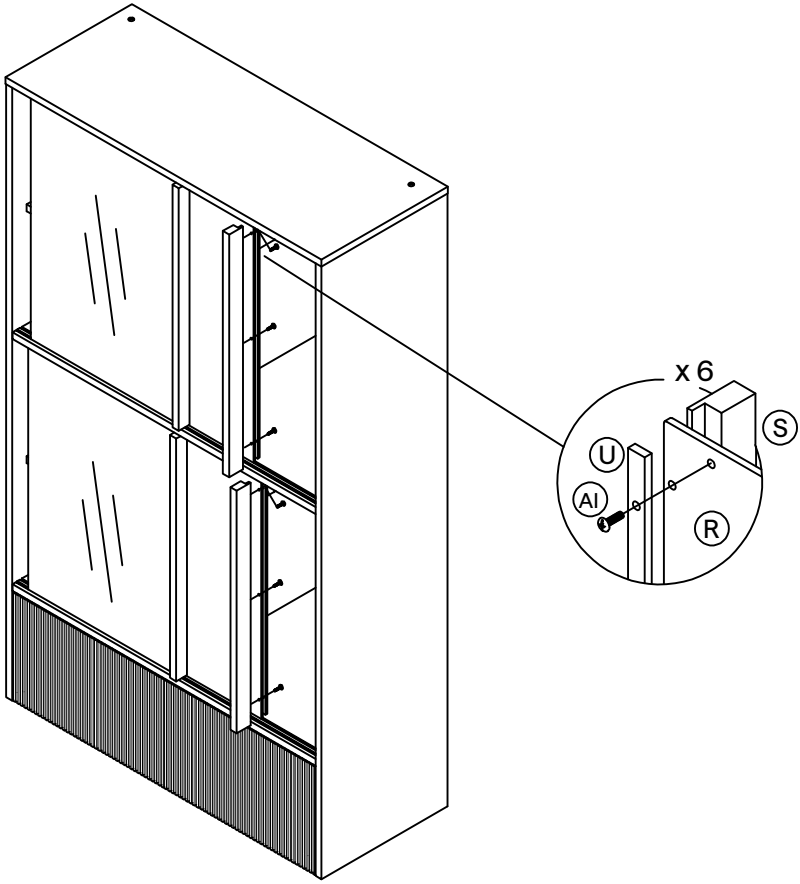
x 6
S
U
AI
R

19

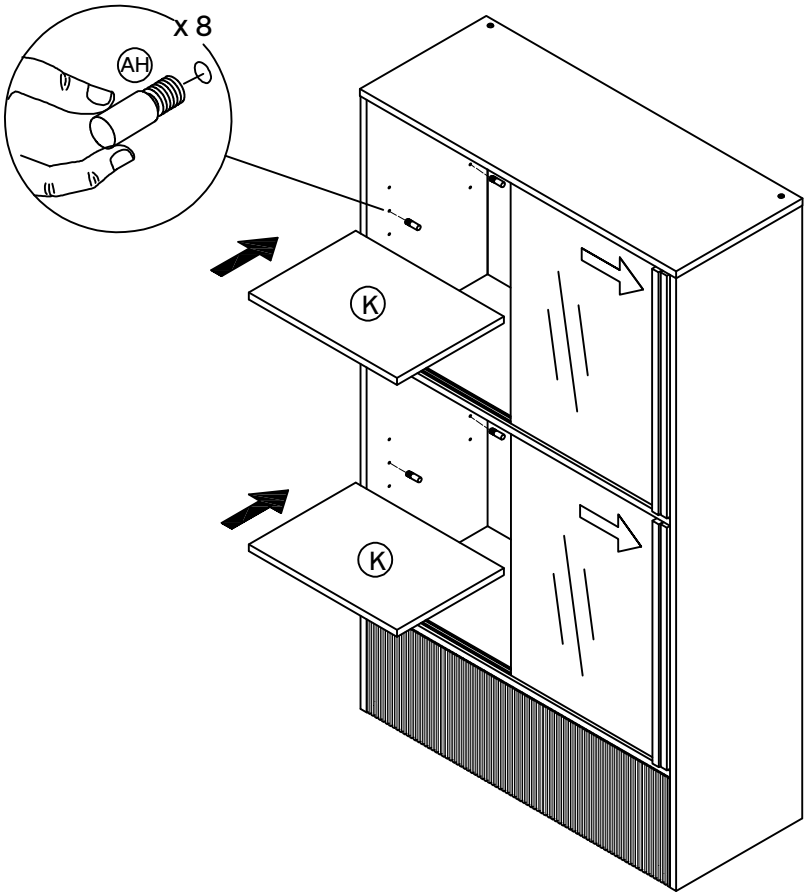

20

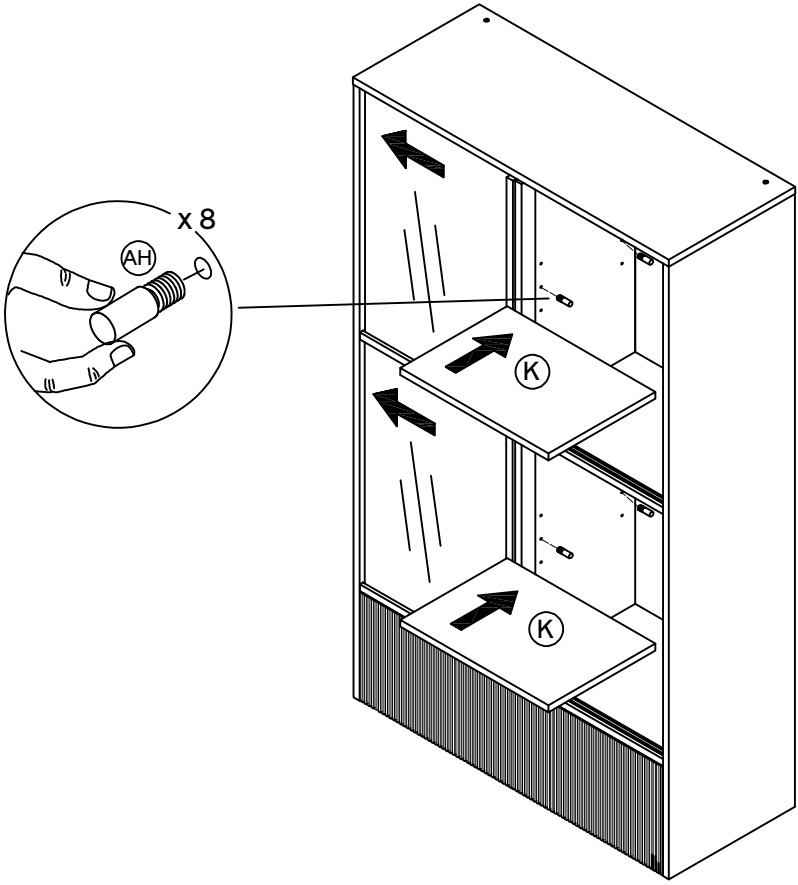

21

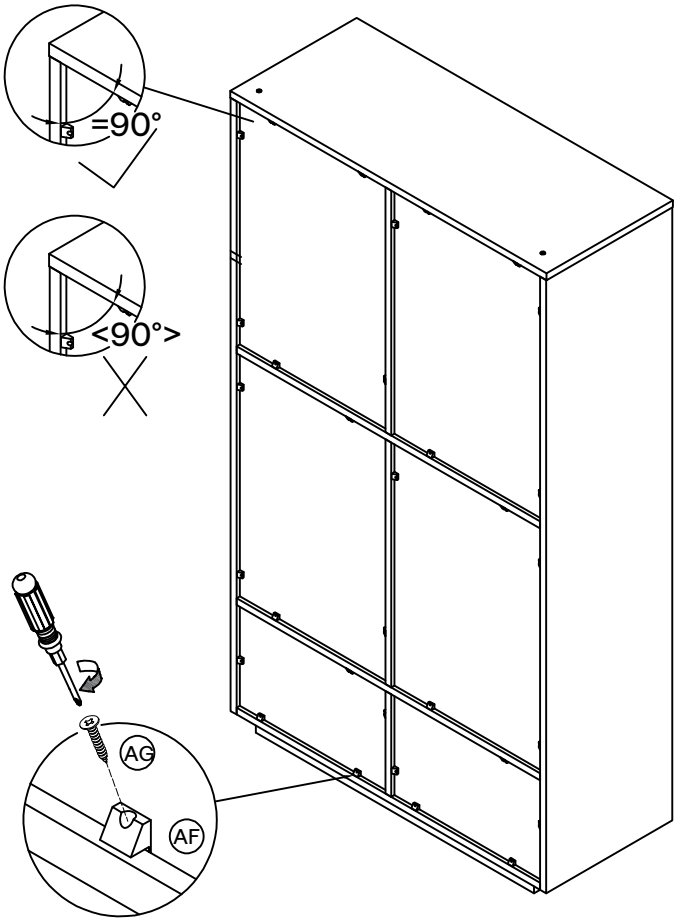

22

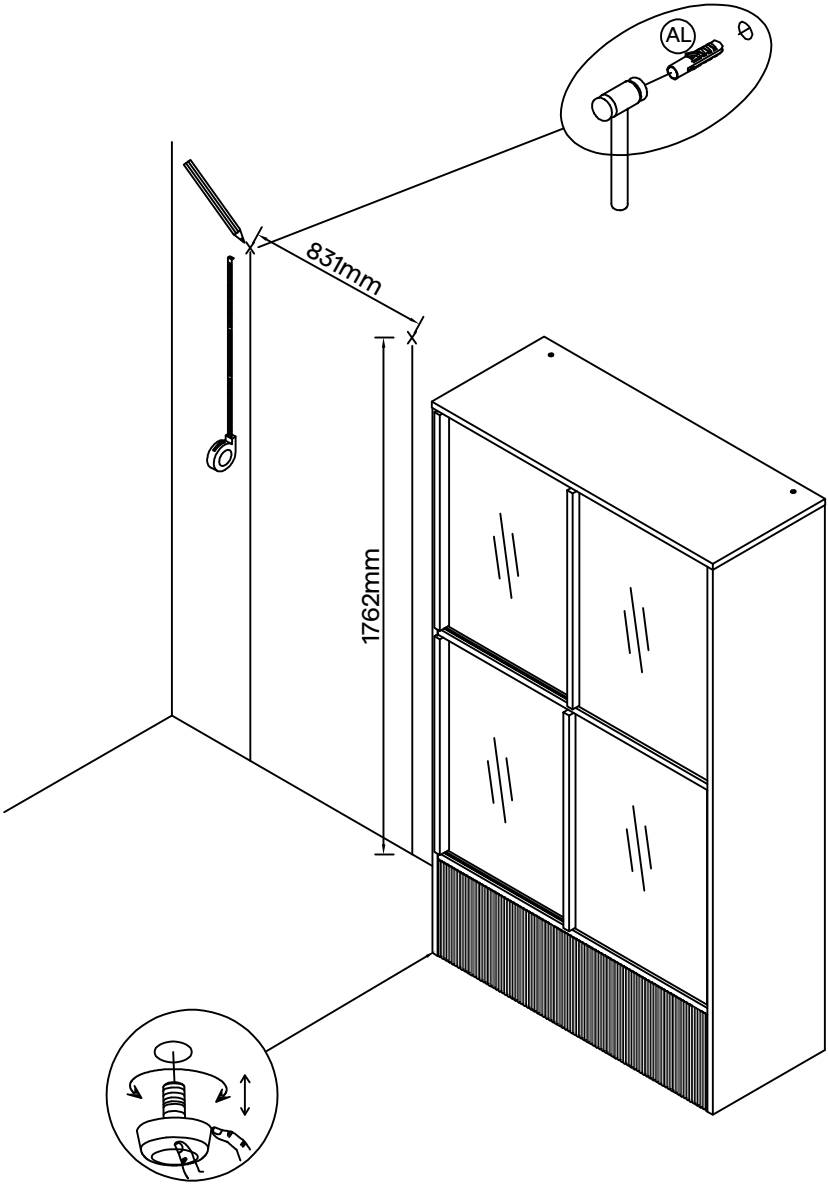

23

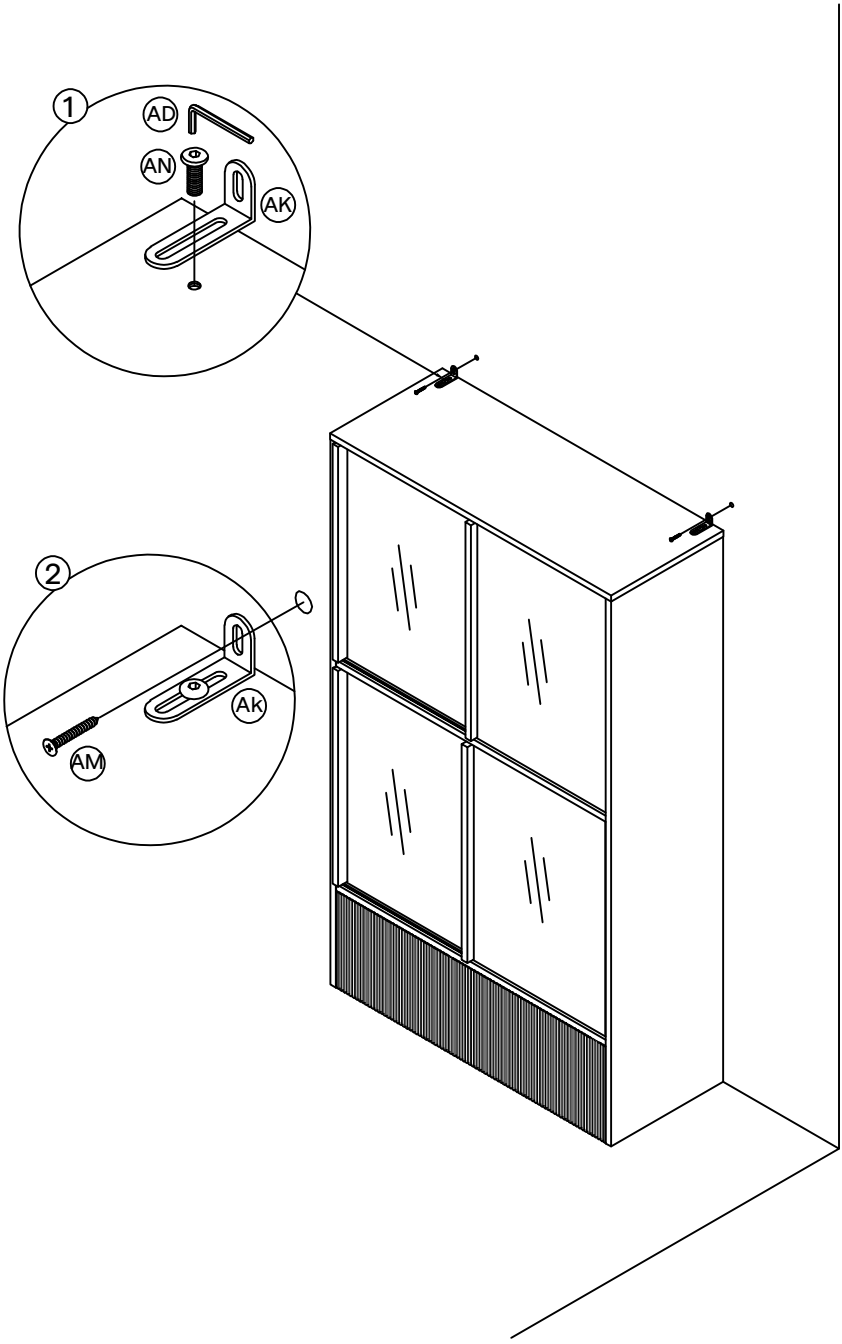

24

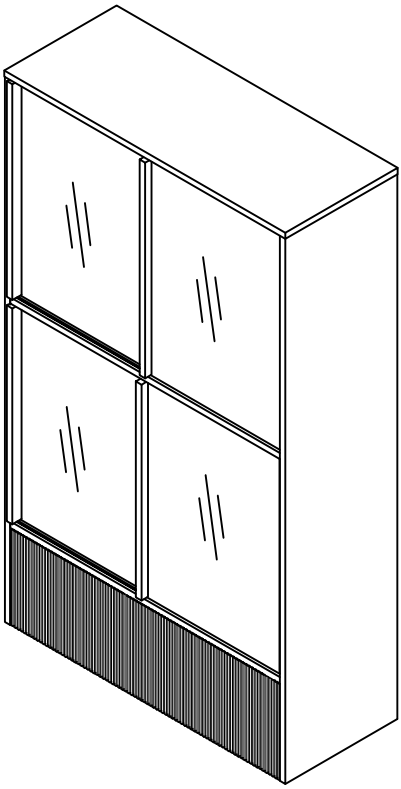

Kave

Julià Grup Furniture Solutions S.L.
B-17616277
Pol. Ind. Bosc d'en Cuca
C/ Tallers, 14. 17410 Sils, Spain
contact@kavehome.com

FR

22
PAP

Al Azul

IT: PAP 22, Carta.
Verifica le disposizioni del tuo comune.