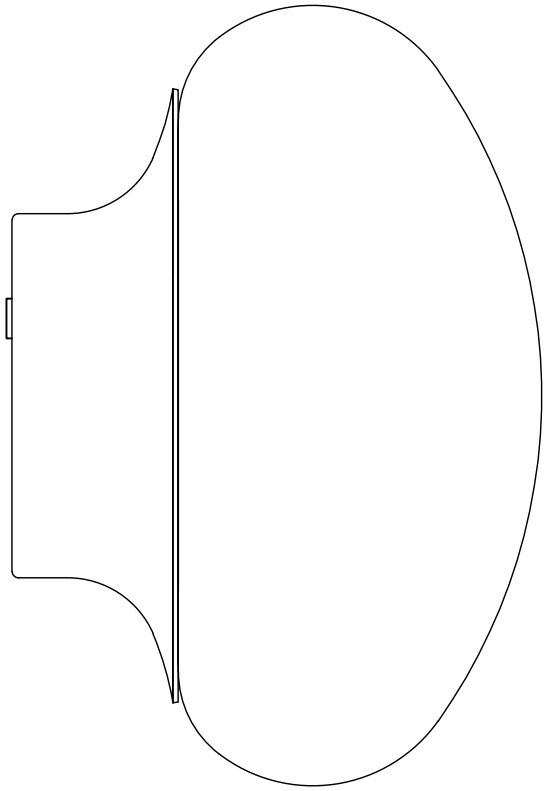

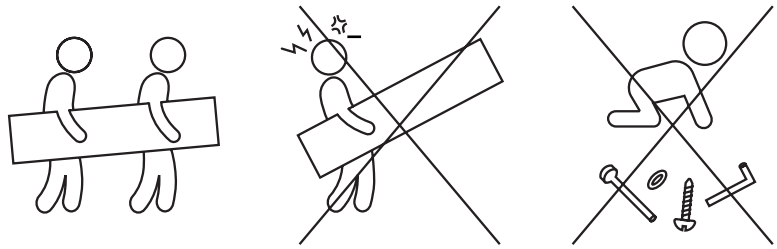

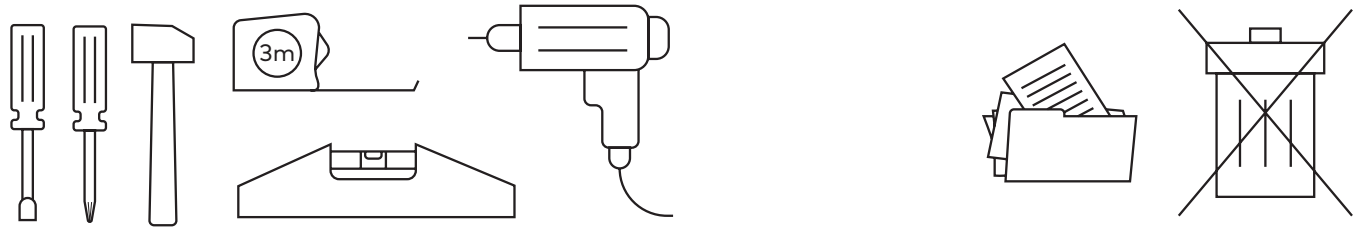
3m

min
max
min
max

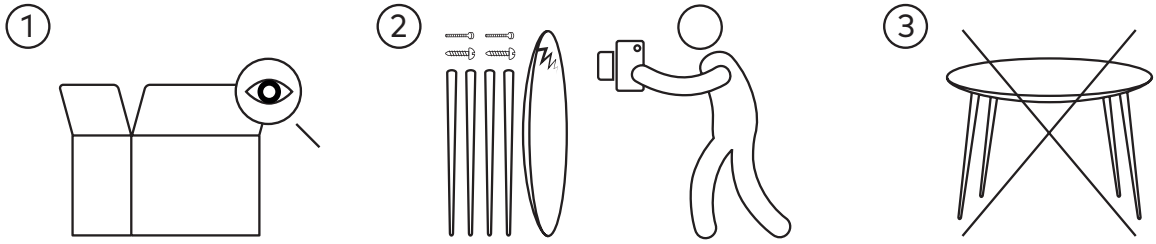
1
2
3

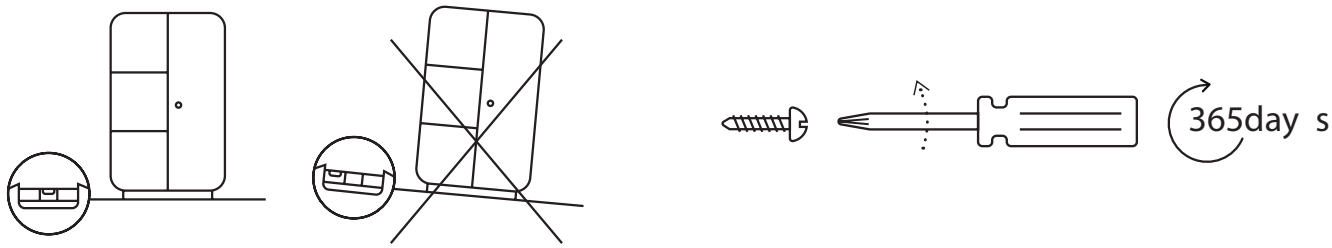
365day s

10 min

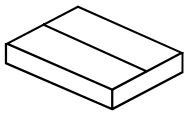

x3

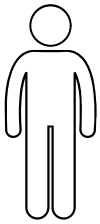

x1

Ax6

Bx3

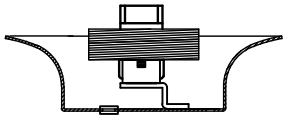

Cx1

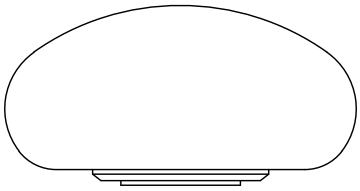

Dx1

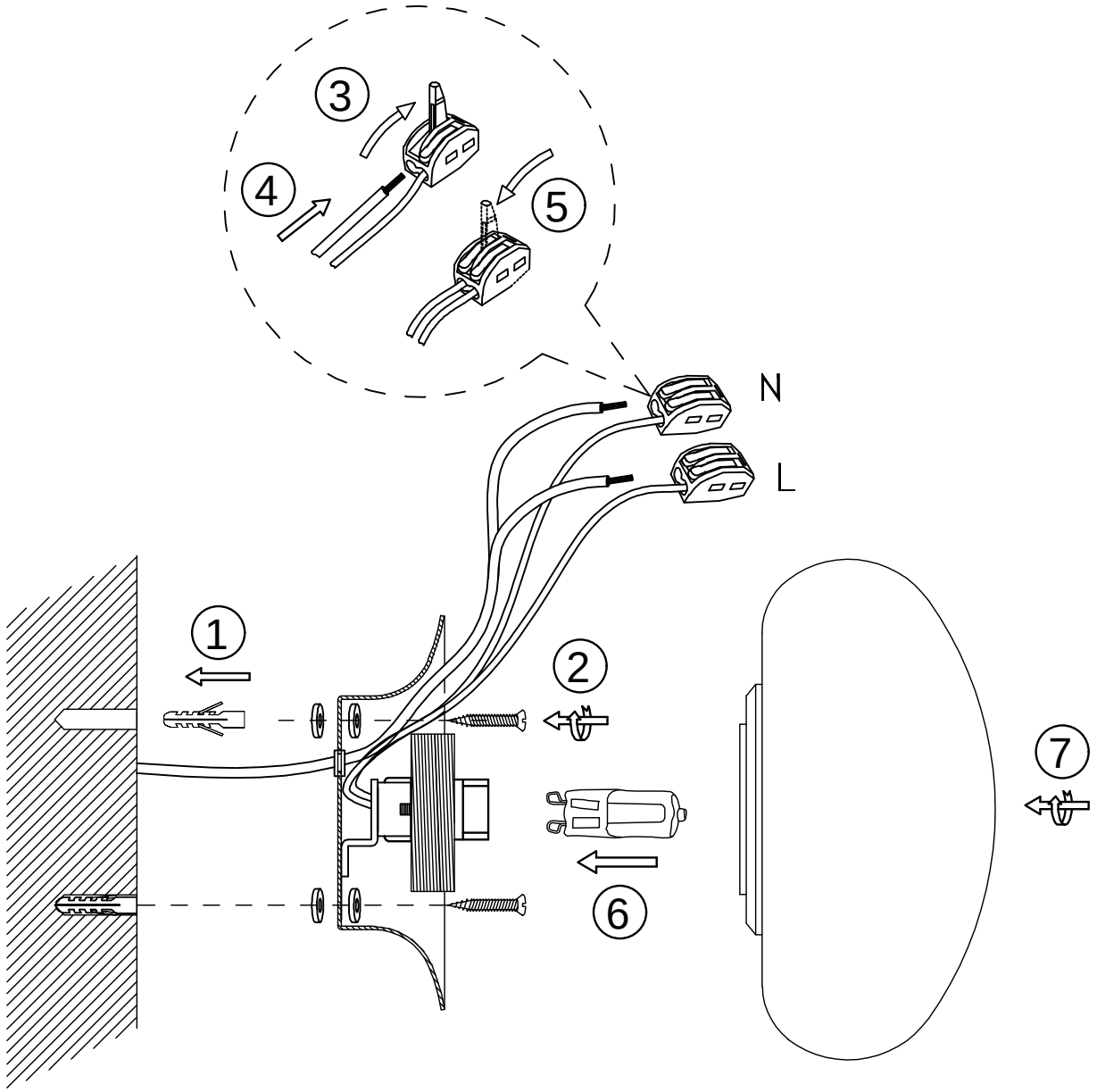
3
4
5
N
L
1
2
7
6

1

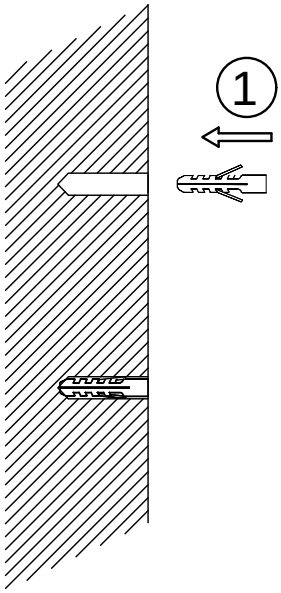

2

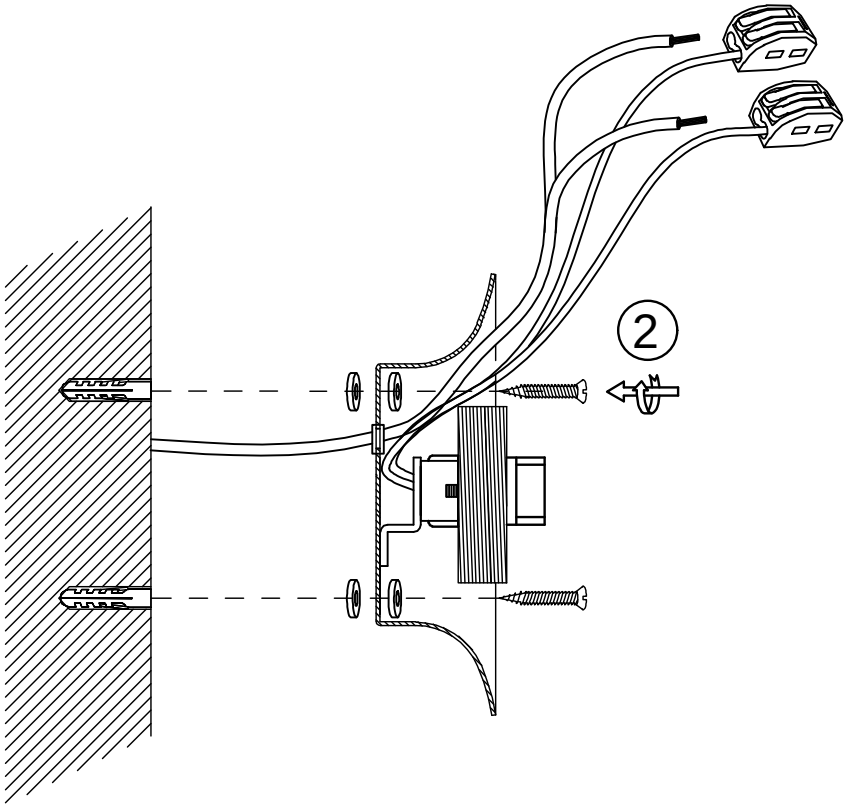

③④⑤

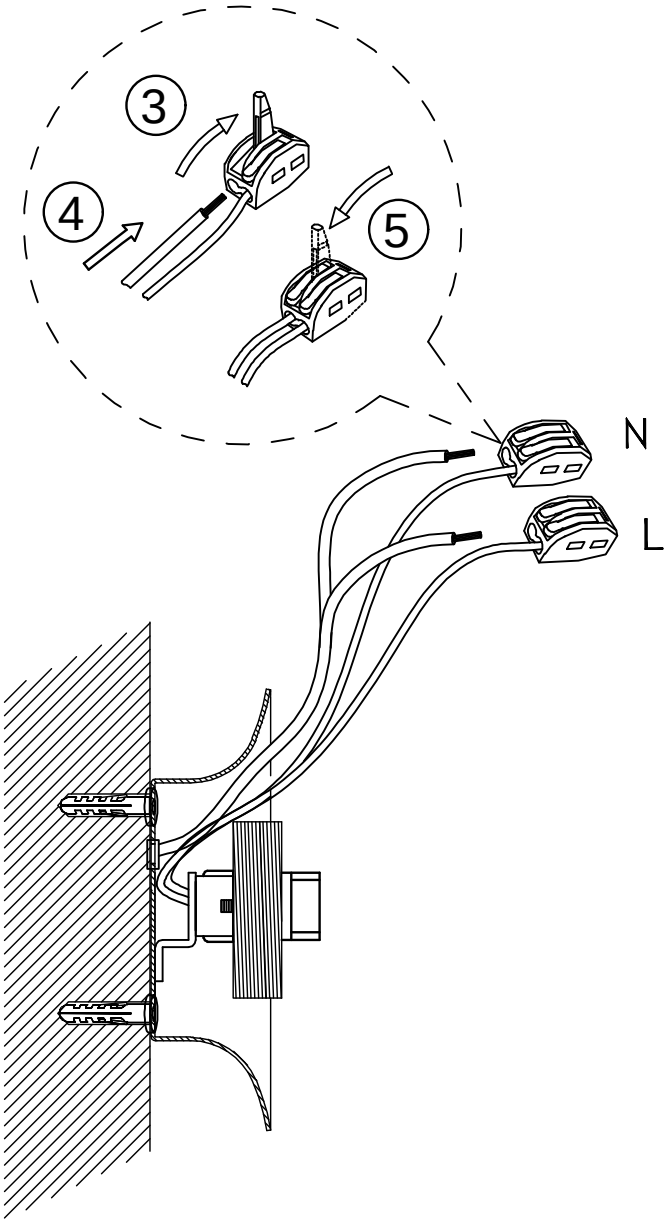

⑥

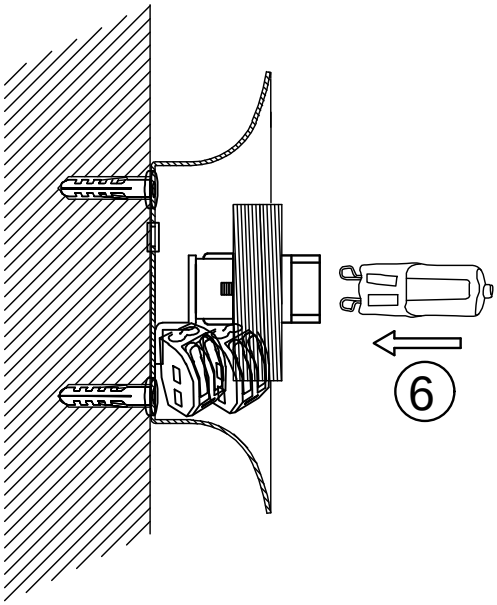

7

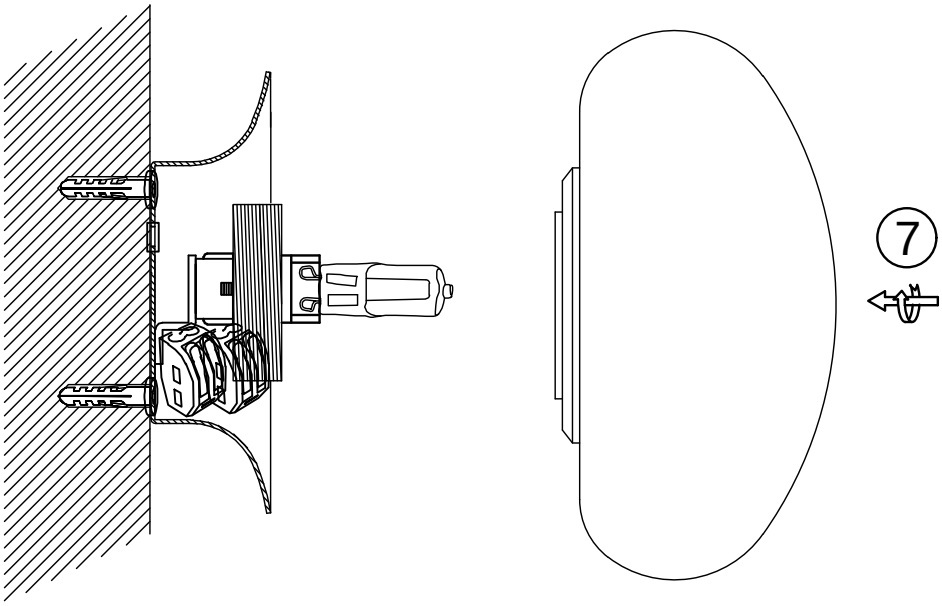

# THAT'S ALL FOLKS!

**JULIÀ GRUP Furniture Solutions S.L.**
B-17616277
Pol. Ind. Bosc d'en Cuca
C / Tallers, 14
17410 Sils SPAIN
contact@kavehome.com