Kave Home®

Freeman / Leora

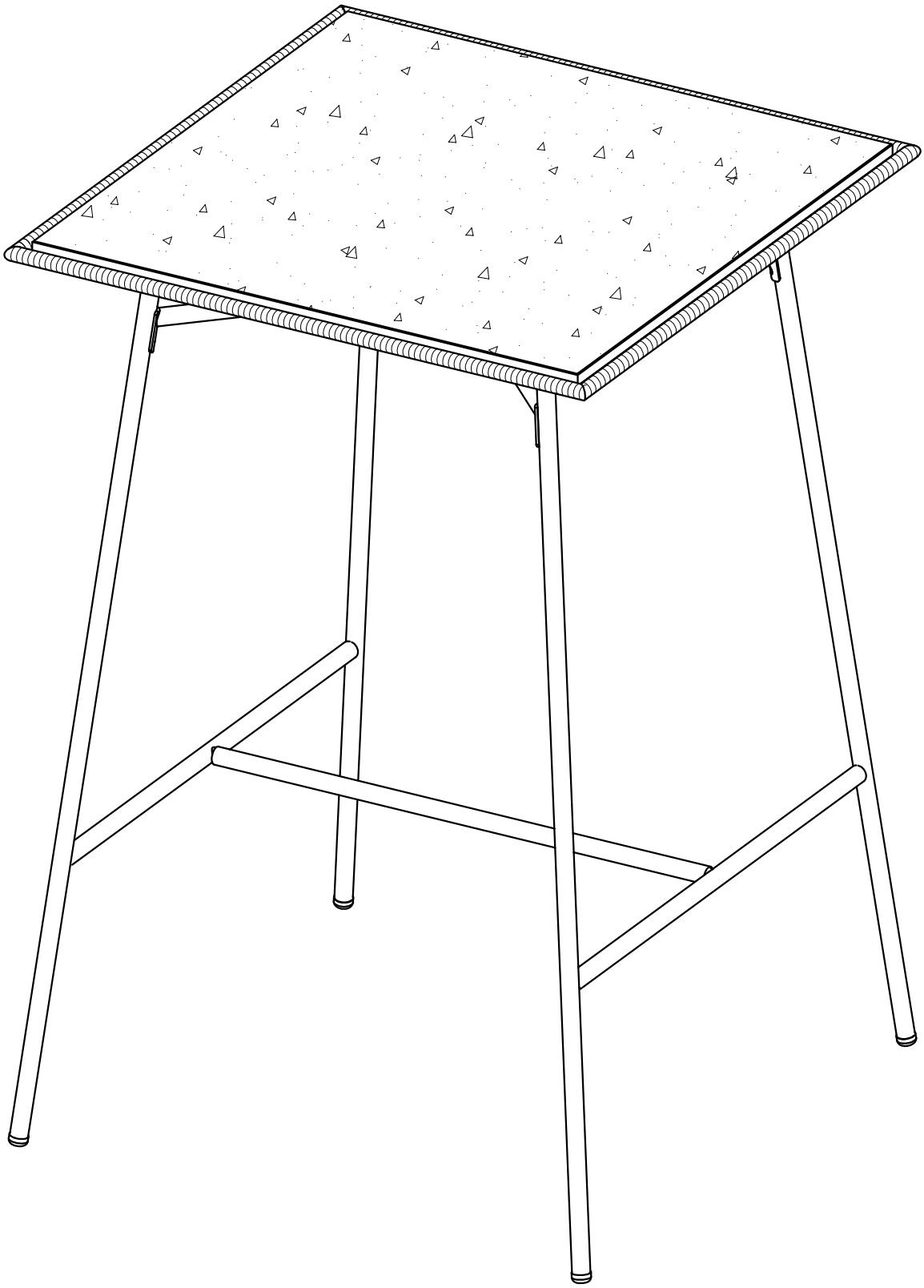

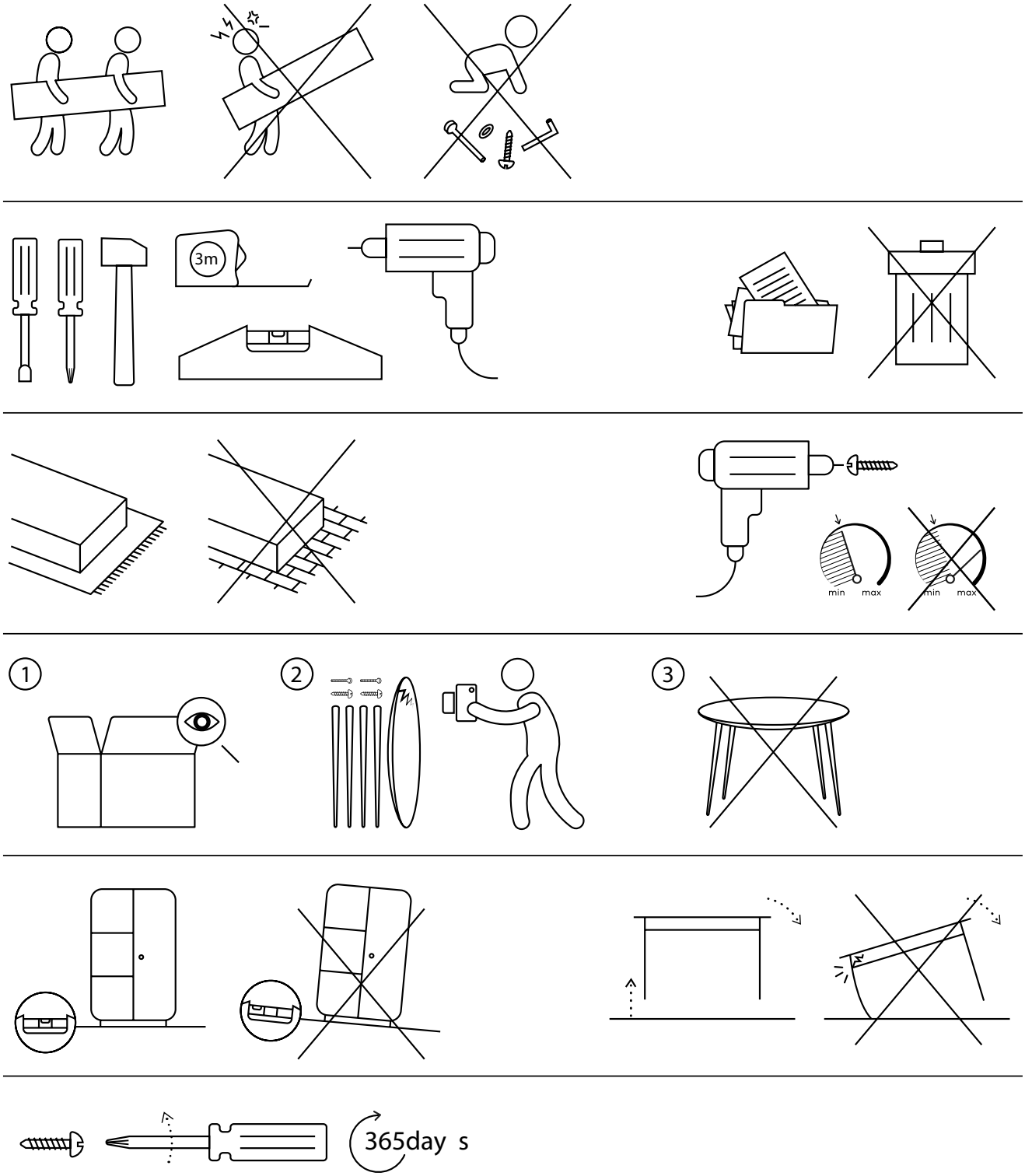
3m
min
max
min
max
1
2
3
365day s

10 min

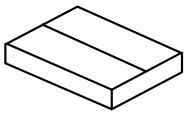

x1

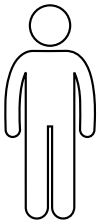

x1

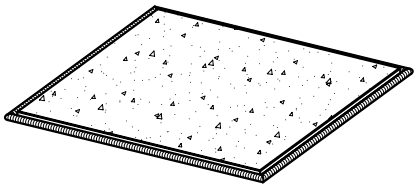

A x1

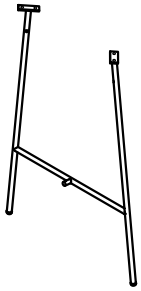

B x2

C x1

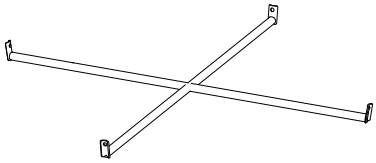

D x1

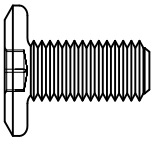

1 x 10(M6x10)

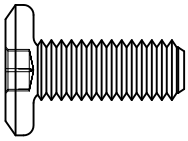

2 x 4(M6x15)

3 x 1

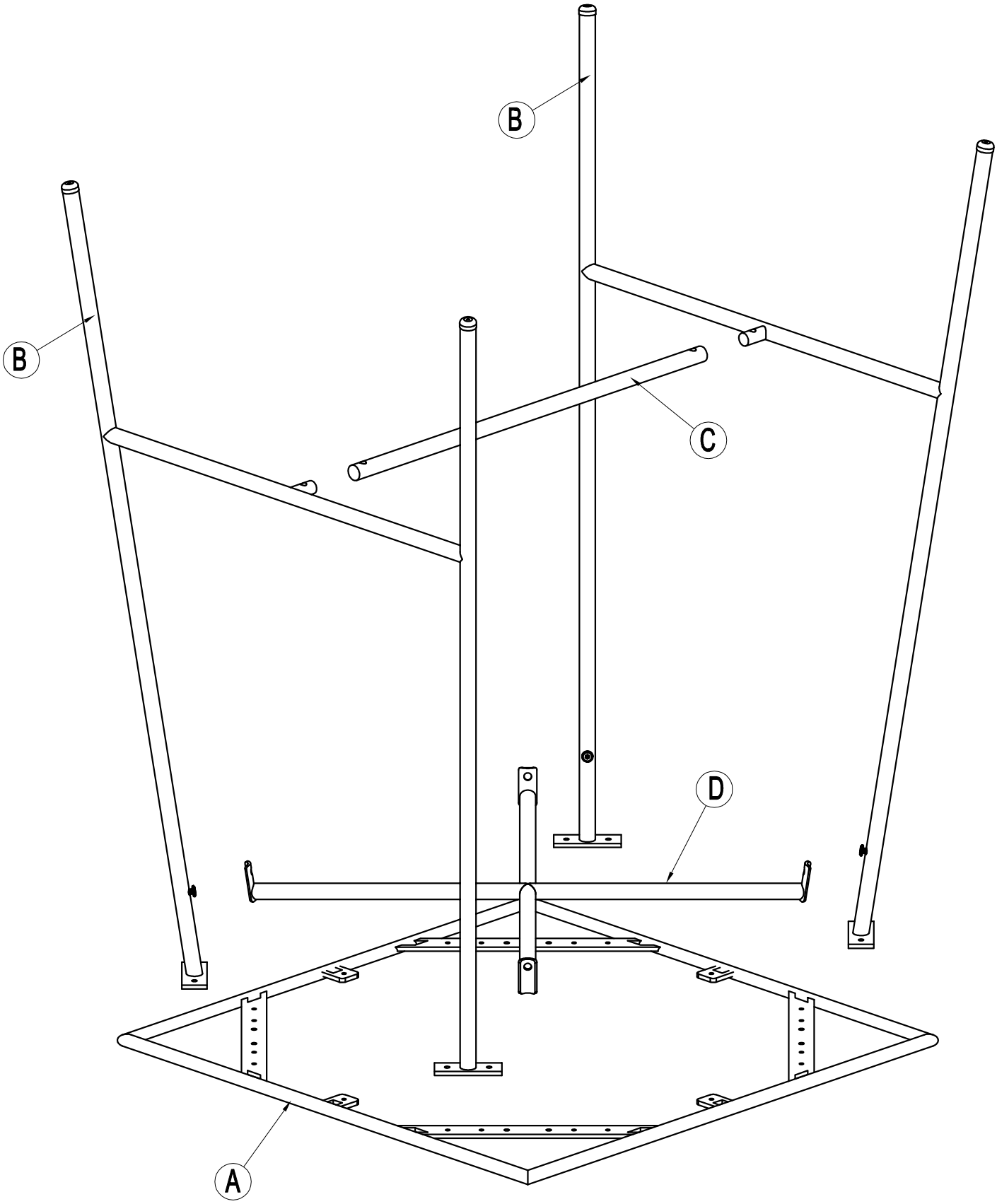
B
B
C
D
A

1

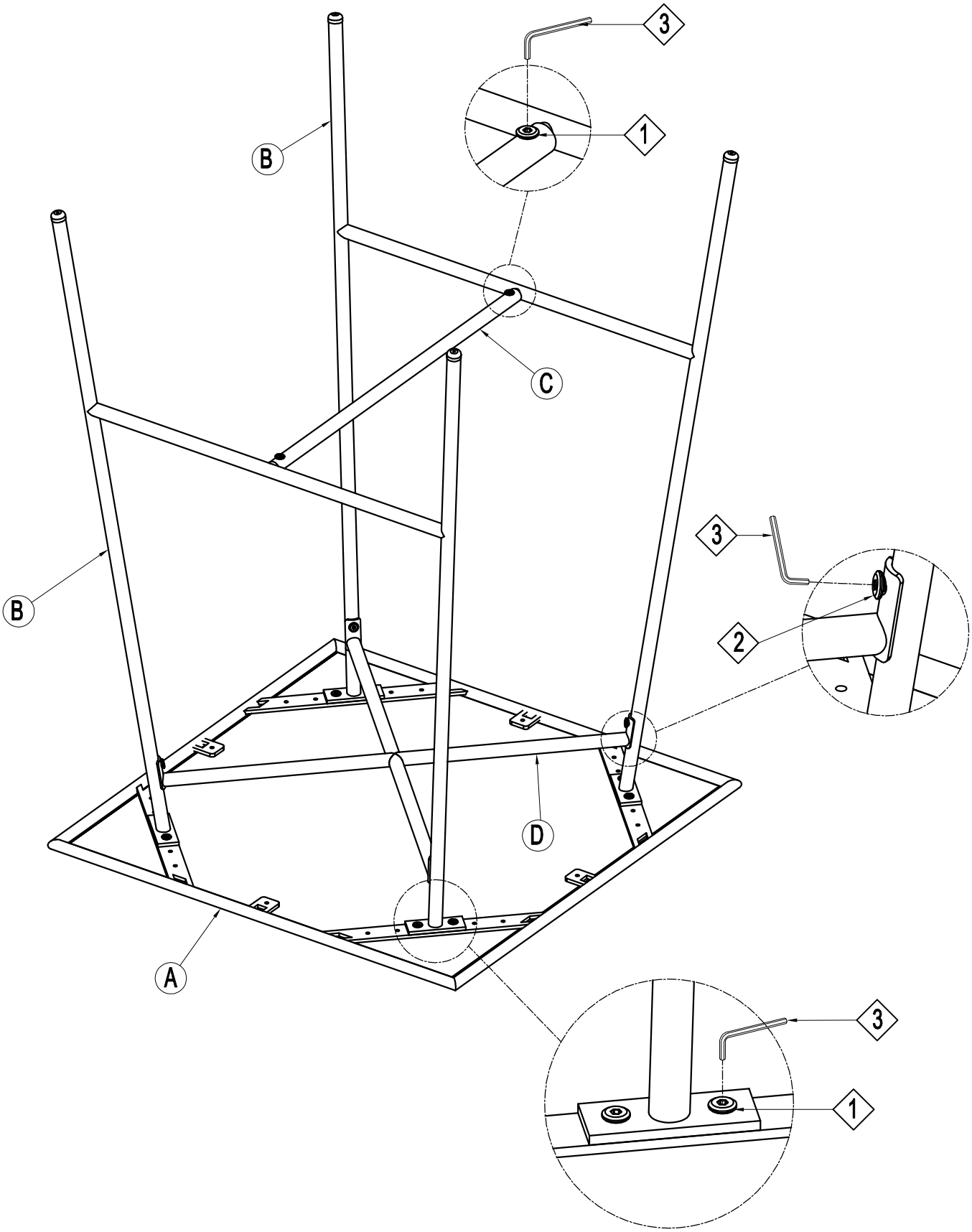

2

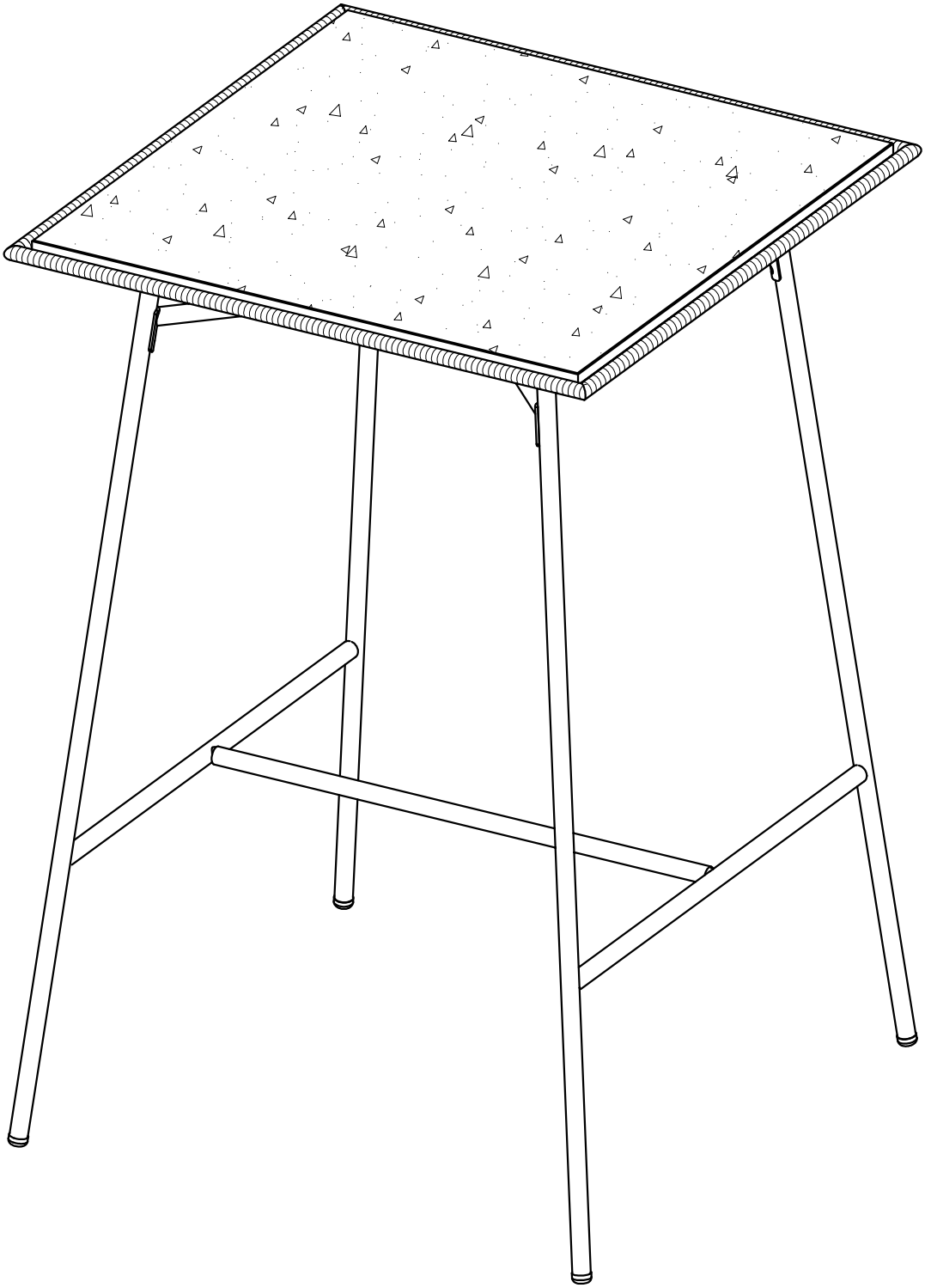

THAT'S ALL FOLKS!

JULIÀ GRUP Furniture Solutions S.L.
B-17616277
Pol. Ind. Bosc d'en Cuca
C / Tallers, 14
17410 Sils SPAIN
contact@kavehome.com