Kave Home®

Marcolina

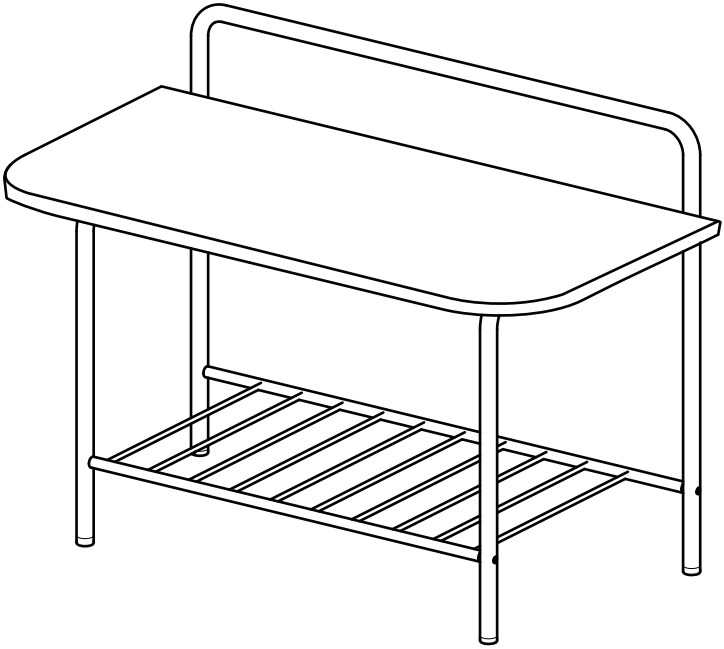

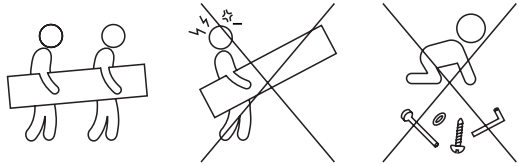

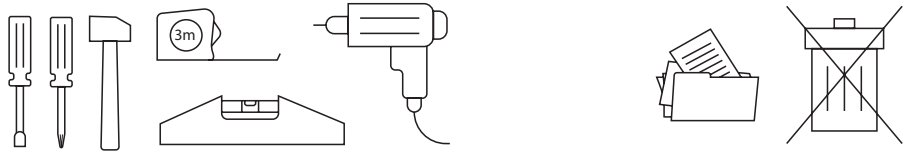
3m

min
max
min
max

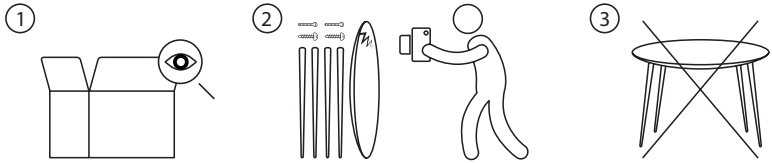
1
2
3

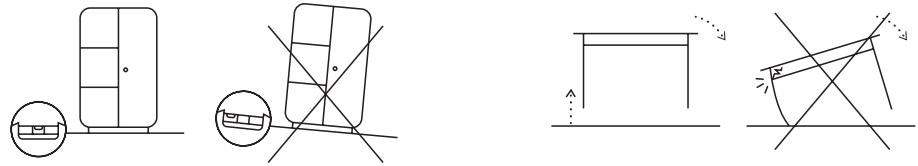

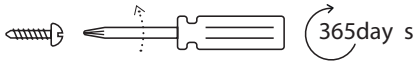
365day s

15 min

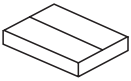

x1

x1

1 x1

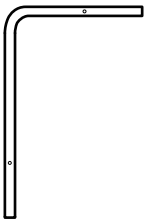

2 x1

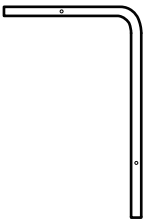

3 x1

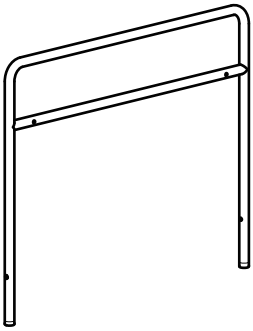

4 x1

5 x1

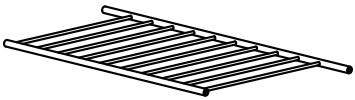

6 x1

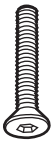

A x13 (Ø6x28mm)

B x4 (Ø19x12mm)

C x1

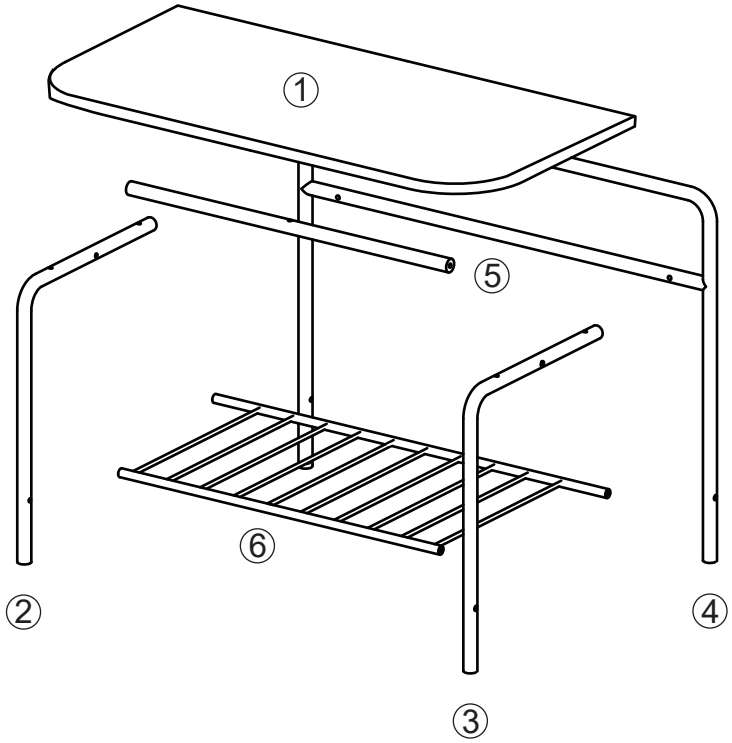
1
5
6
2
4
3

1

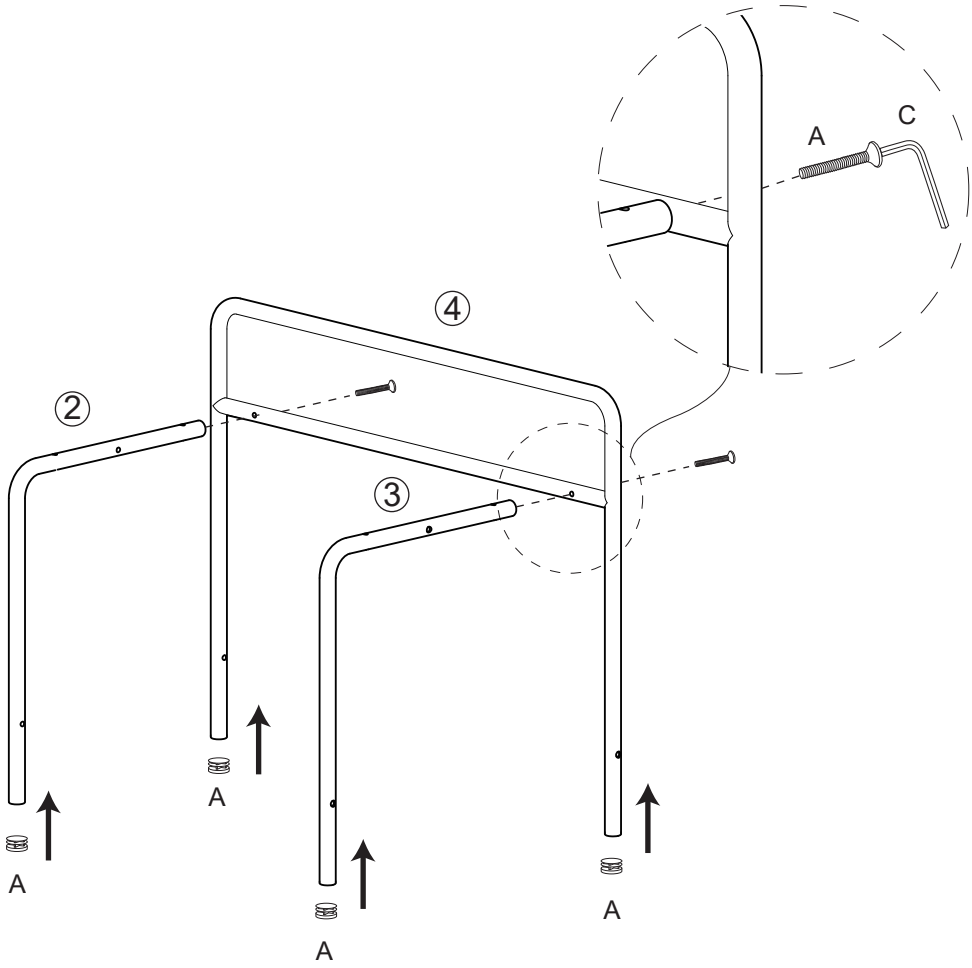

2

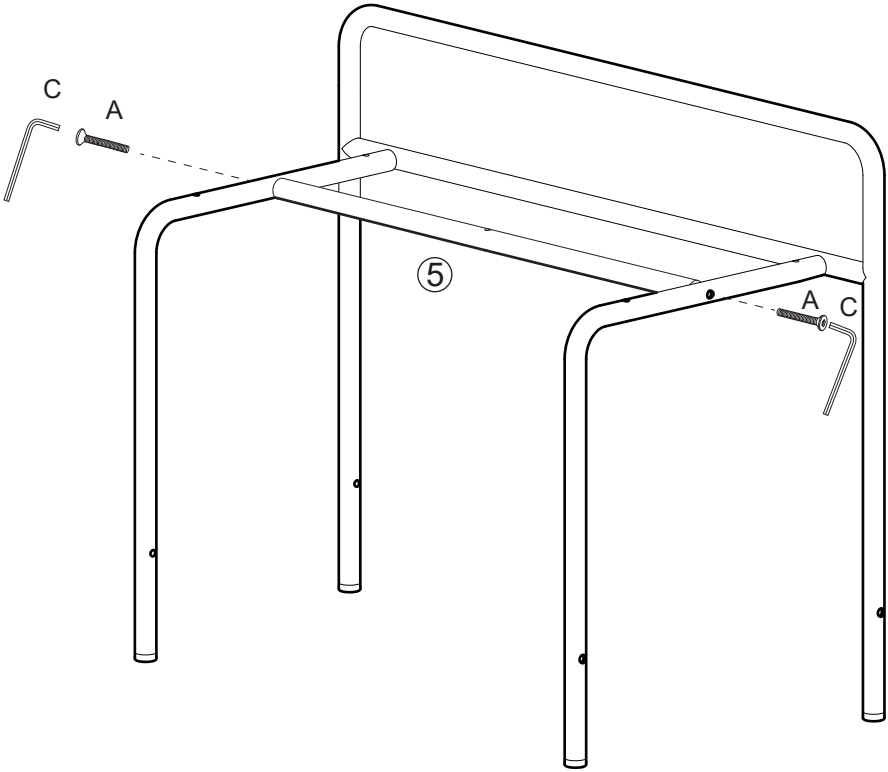

3

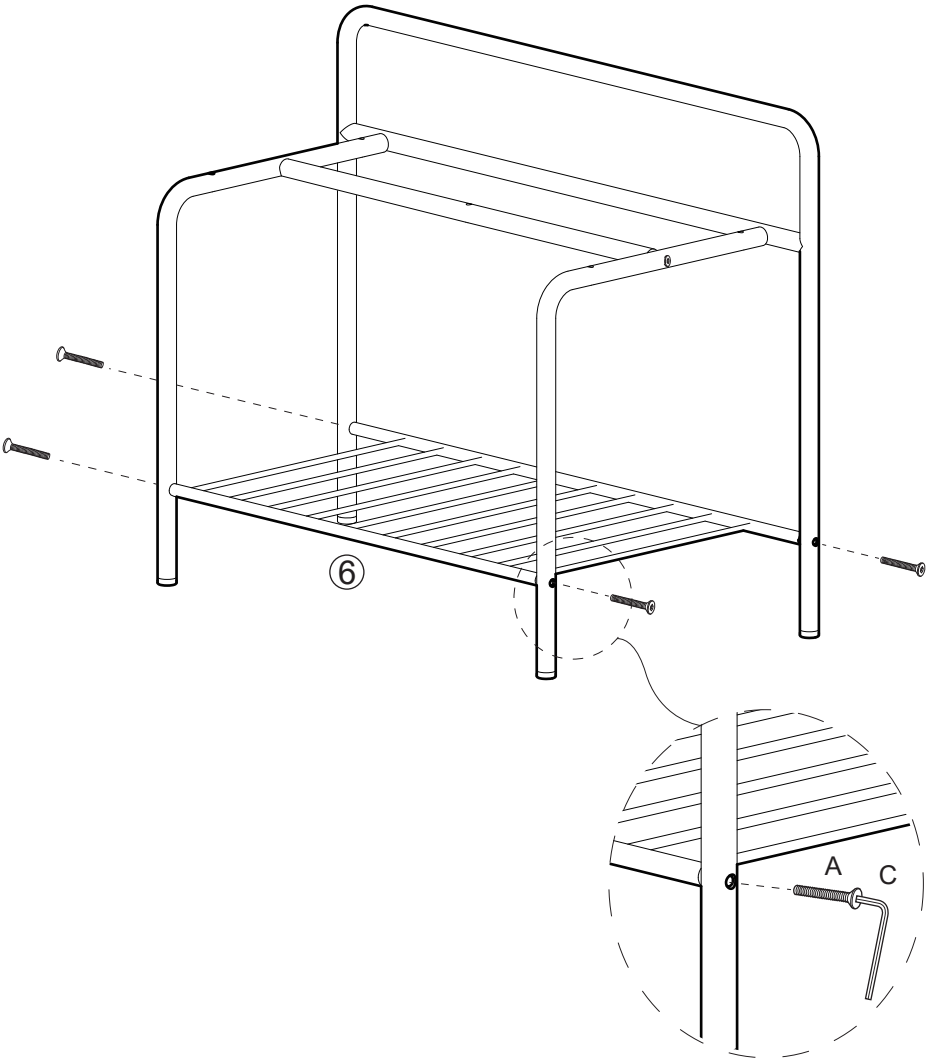

4

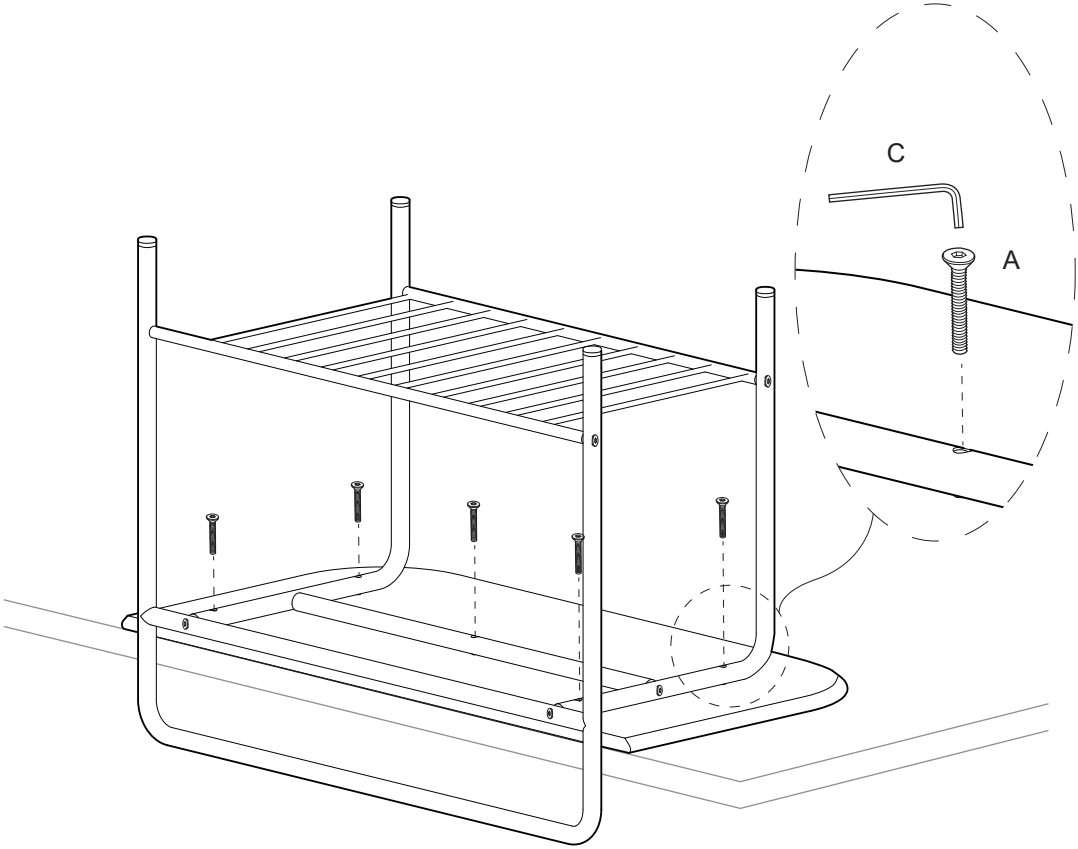

THAT'S ALL FOLKS!

JULIÀ GRUP Furniture Solutions S.L.
B-17616277
Pol. Ind. Bosc d’en Cuca
C / Tallers, 14
17410 Sils SPAIN
contact@kavehome.com