AA4129R01

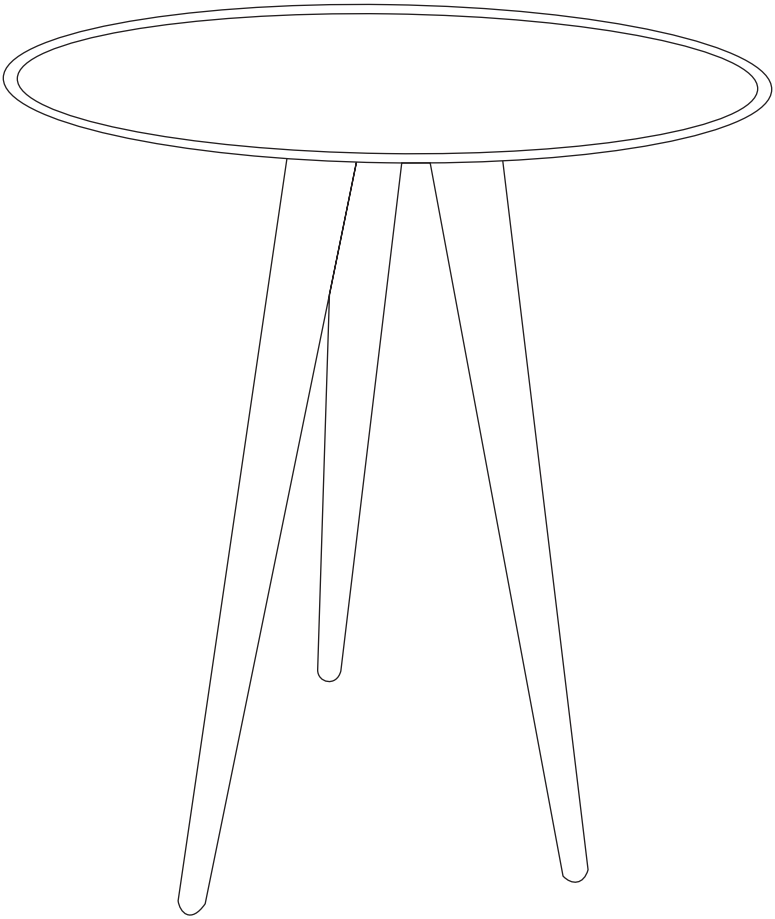

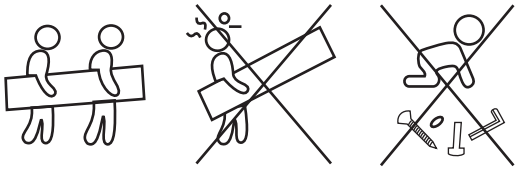

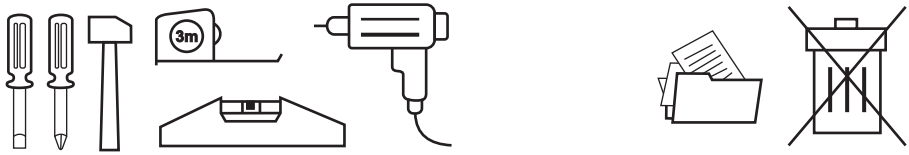
3m

min
max
min
max

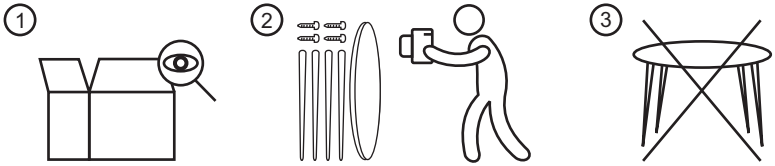
1
2
3

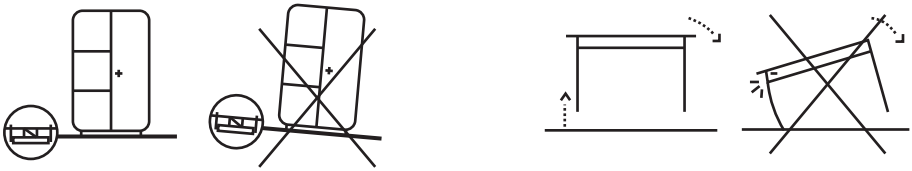

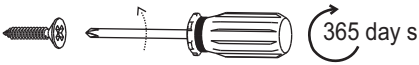
365 day s

5 min

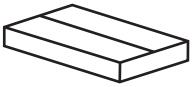

x1

x1

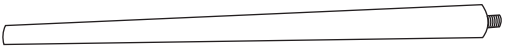

1 x 3

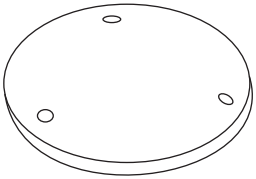

1 x 1

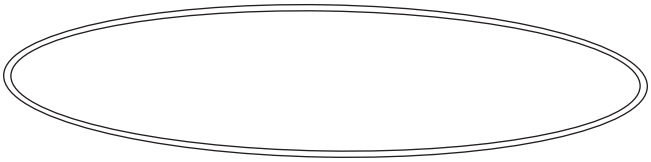

1 x 1

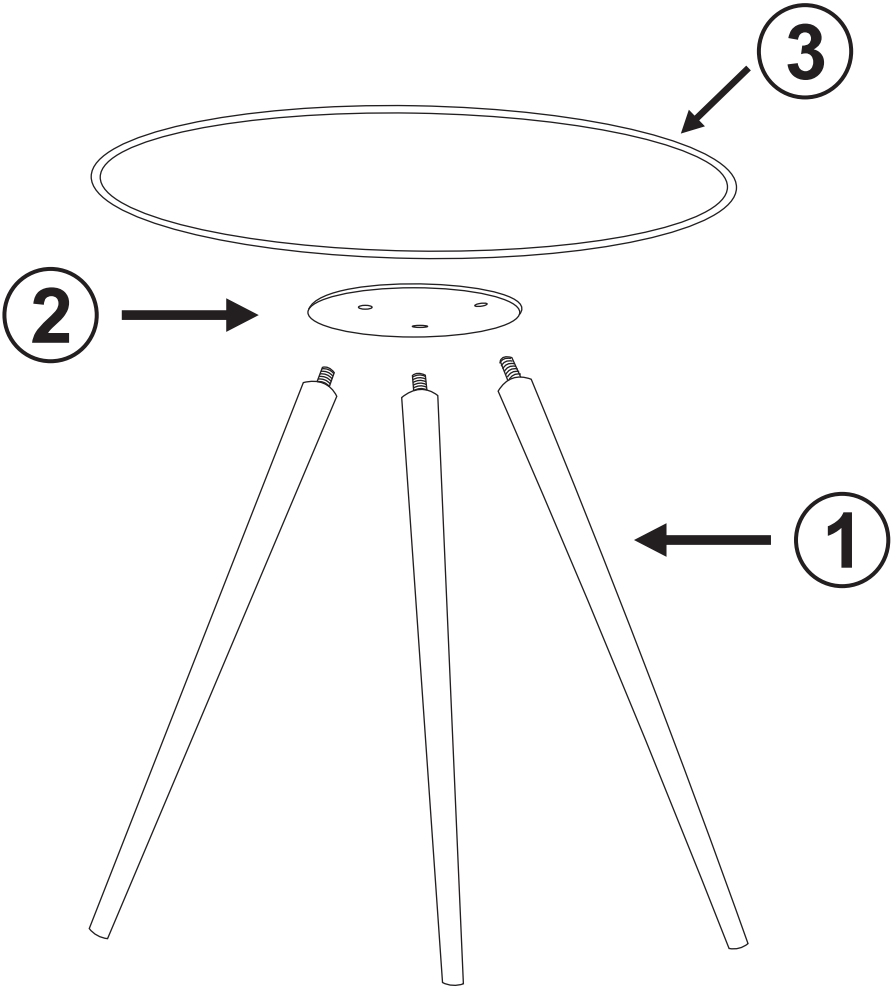
3
2
1

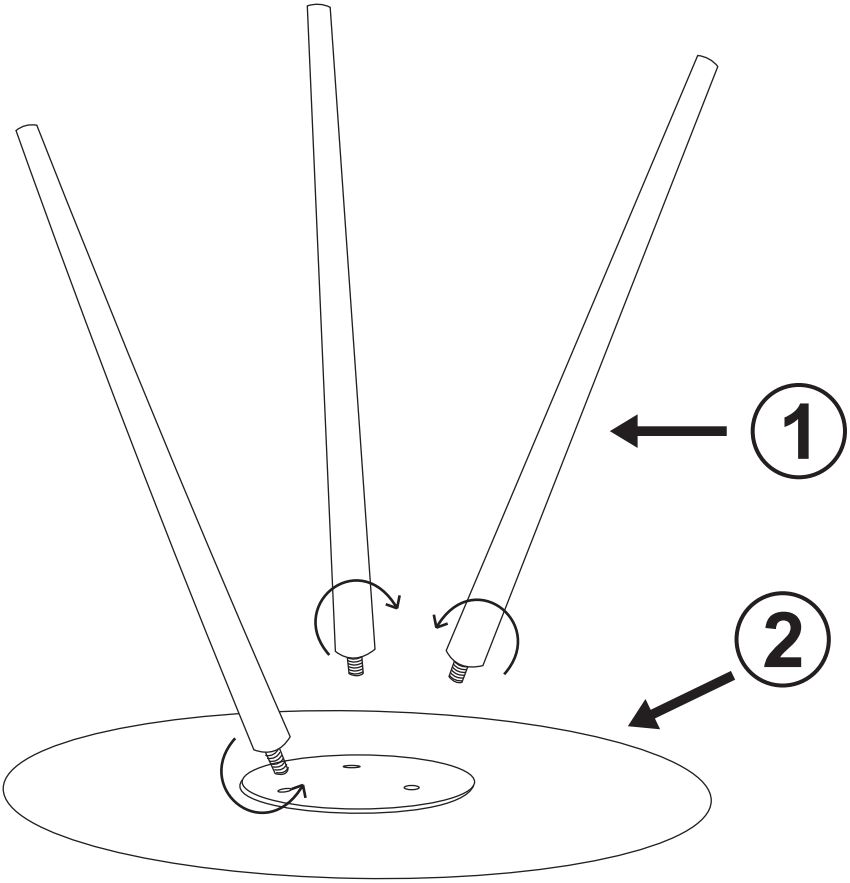
1
2

THAT'S ALL FOLKS!

JULIÀ GRUP Furniture Solutions S.L.
B-17616277
Pol. Ind. Bosc d'en Cuca
C / Tailers, 14
17410 Sils SPAIN
info@juliagrup.com