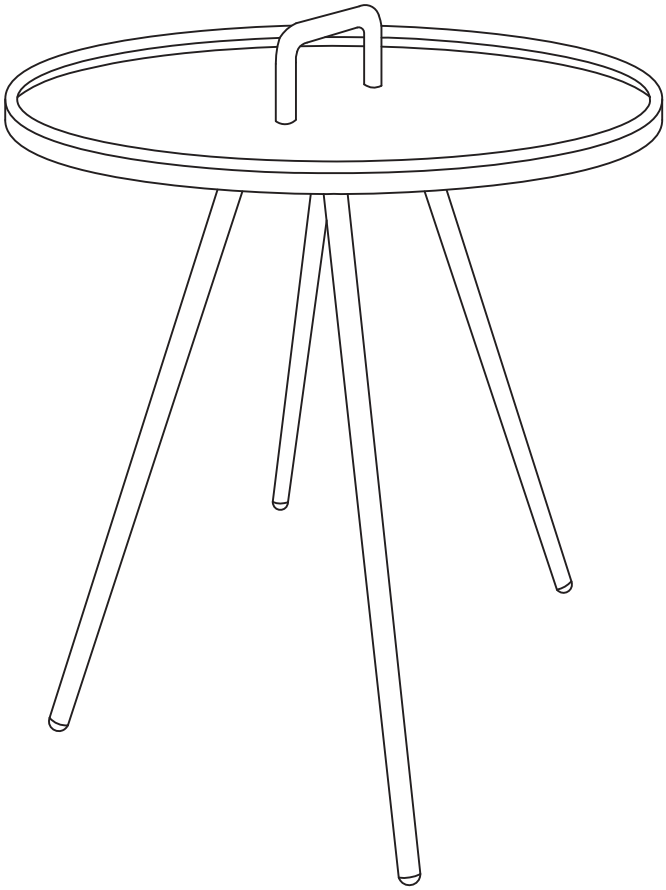

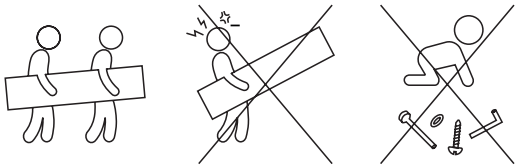

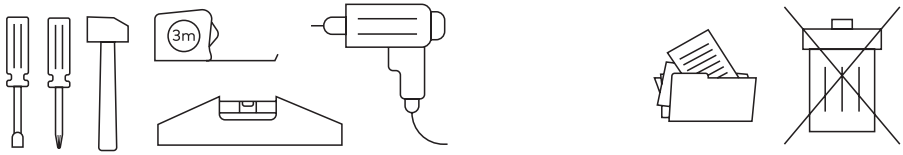
3m

min
max
min
max

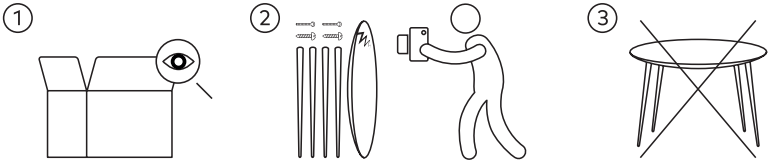
1
2
3

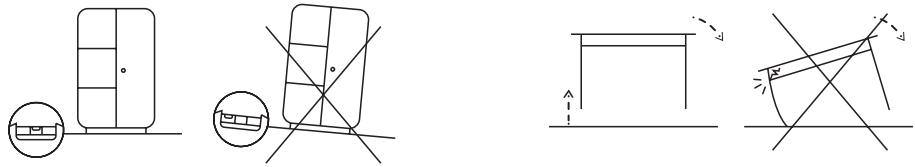

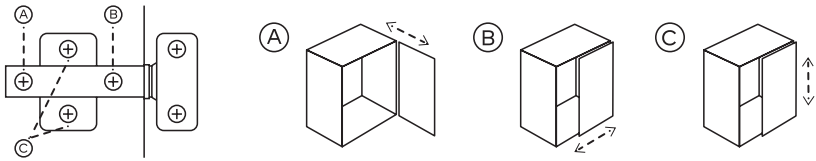
A
B
C
A
B
C

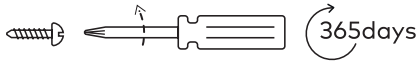
365days

10min

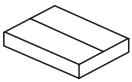

X1

X1

A X1

B X1

C X1

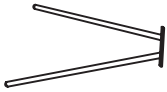

D X2

E X4 ϕ6X0.8

F X4 M6X10

G X2 M6X25

H X2 ϕ6

I X1

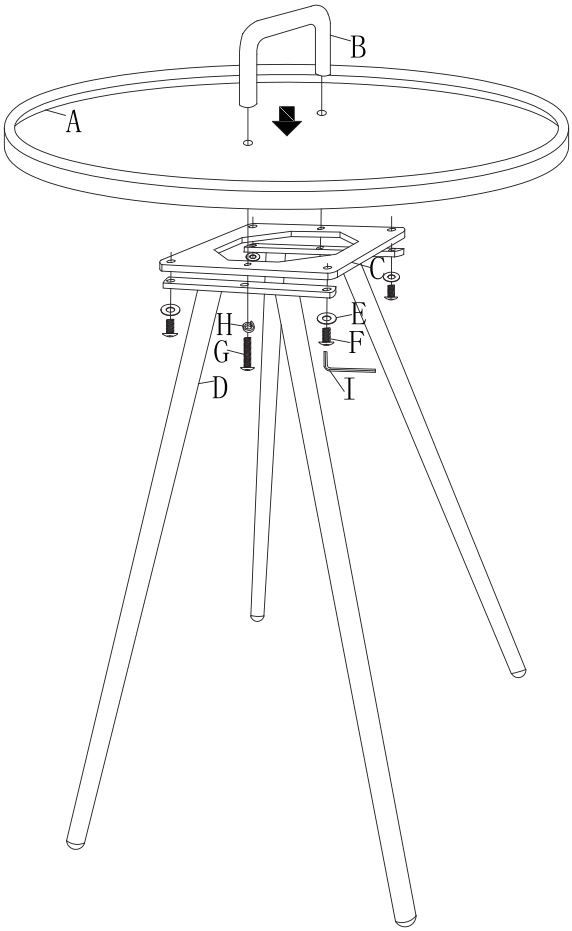
B
A
C
E
H
F
G
D
I

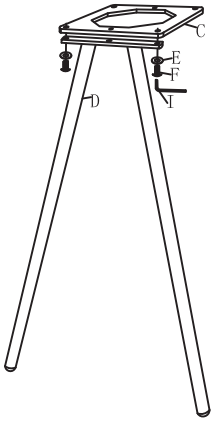
C
E
F
D
I

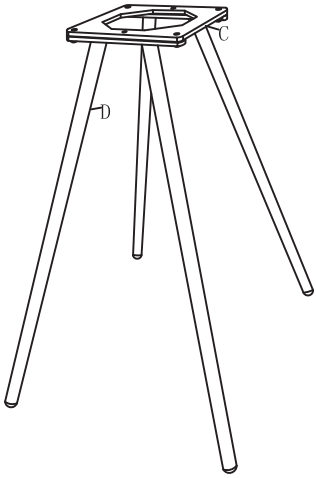
C
D

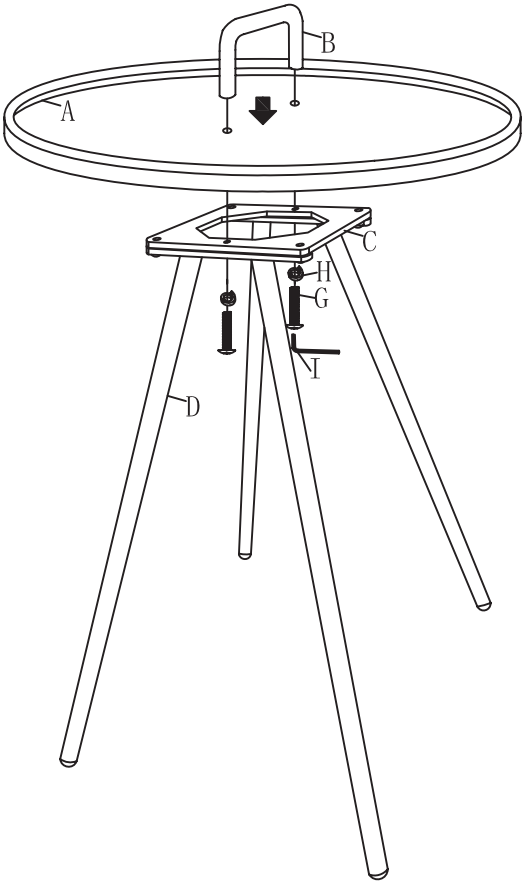
B
A
C
H
G
I
D

THAT'S ALL FOLKS!

JULIÀ GRUP Furniture Solutions S.L.
B-17616277
Pol. Ind. Bosc d'en Cuca
C / Tallers, 14
17410 Sils SPAIN
info@juliagrup.com