S549

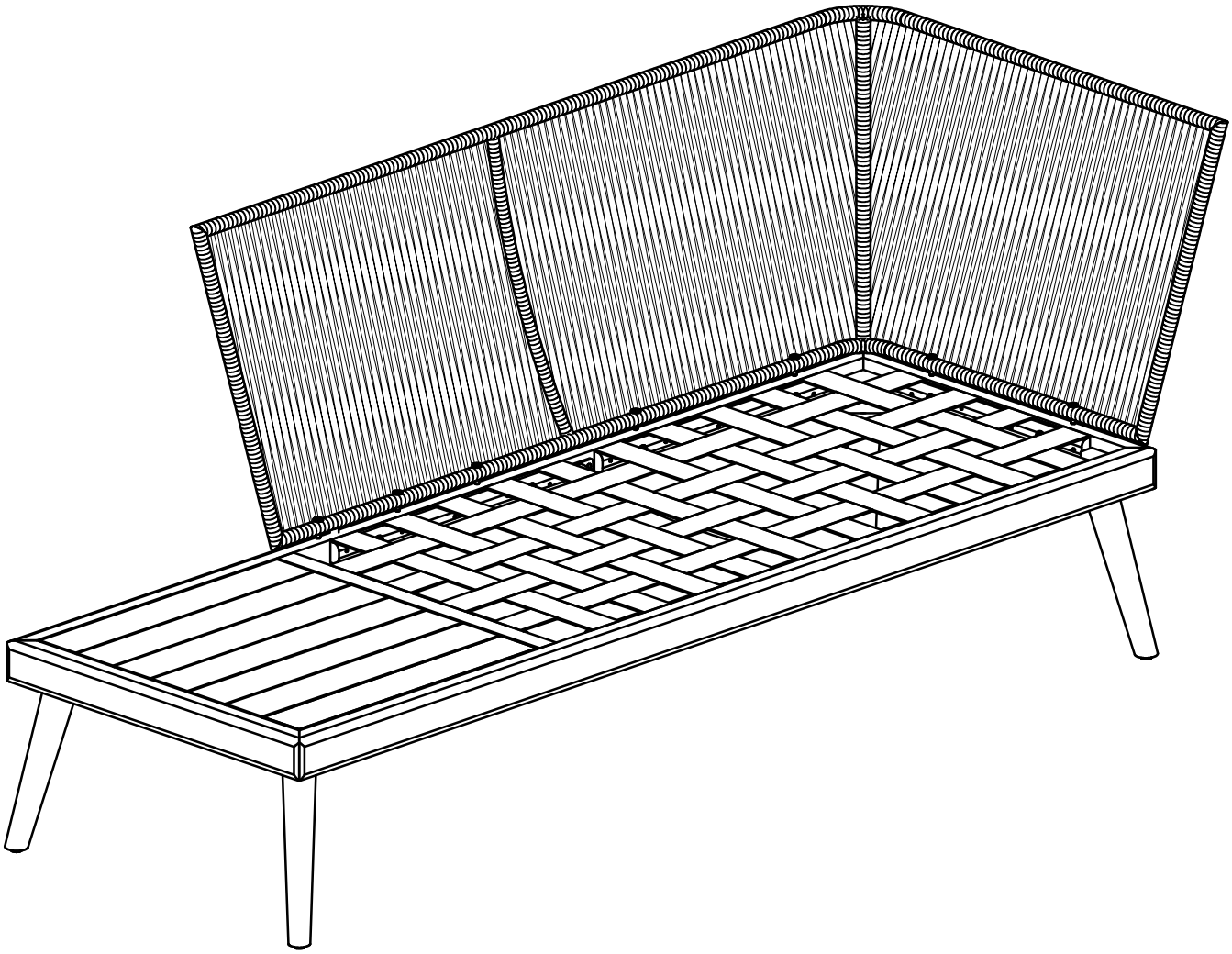

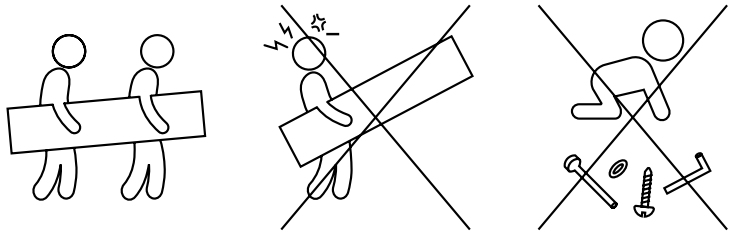

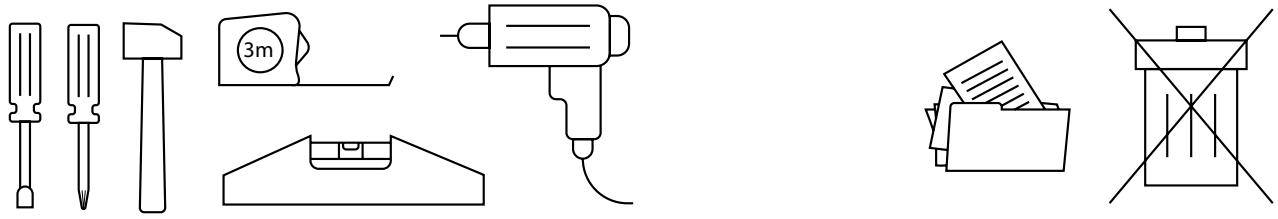
3m

min
max
min
max

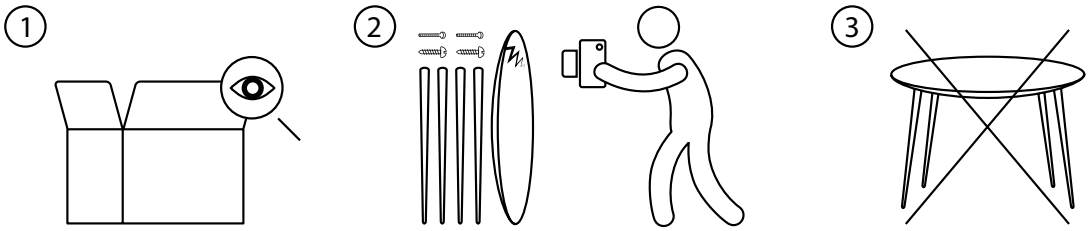
1
2
3

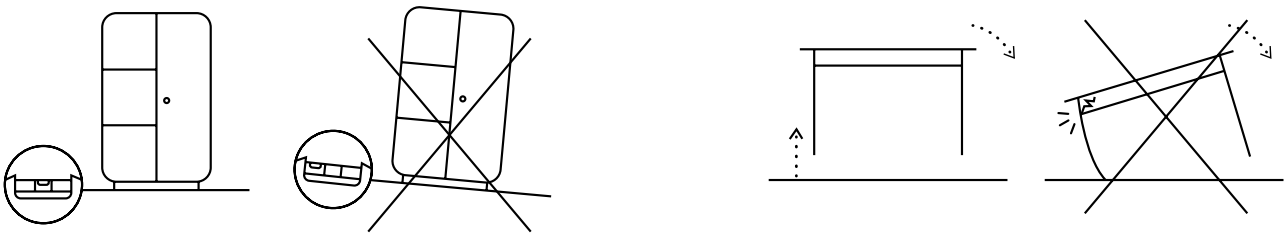

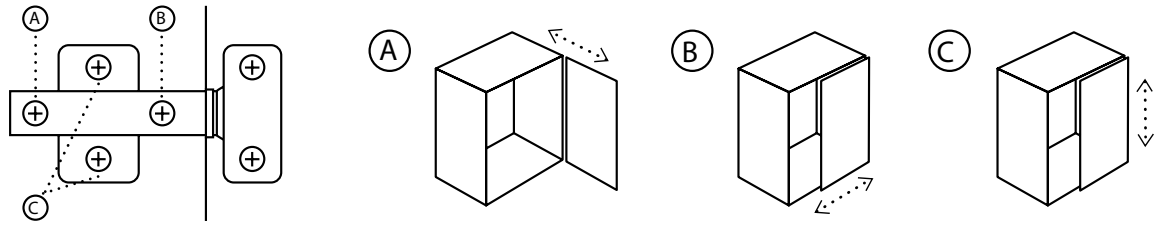
A
B
C
A
B
C

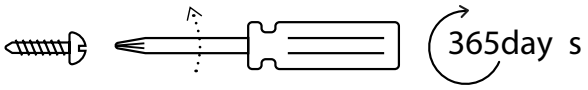
365day s

10 min

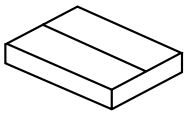

x1

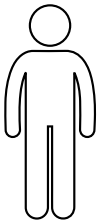

x2

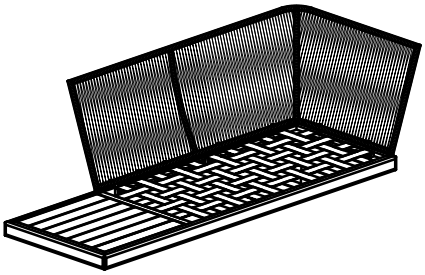

A x1

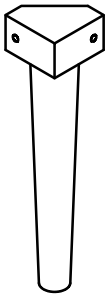

B x1

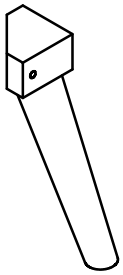

C x2(L/R)

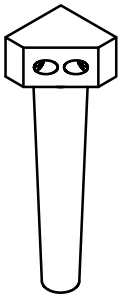

D x1

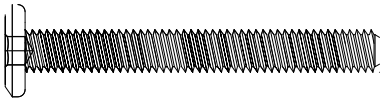

1 x 8

2 x1

3 x2

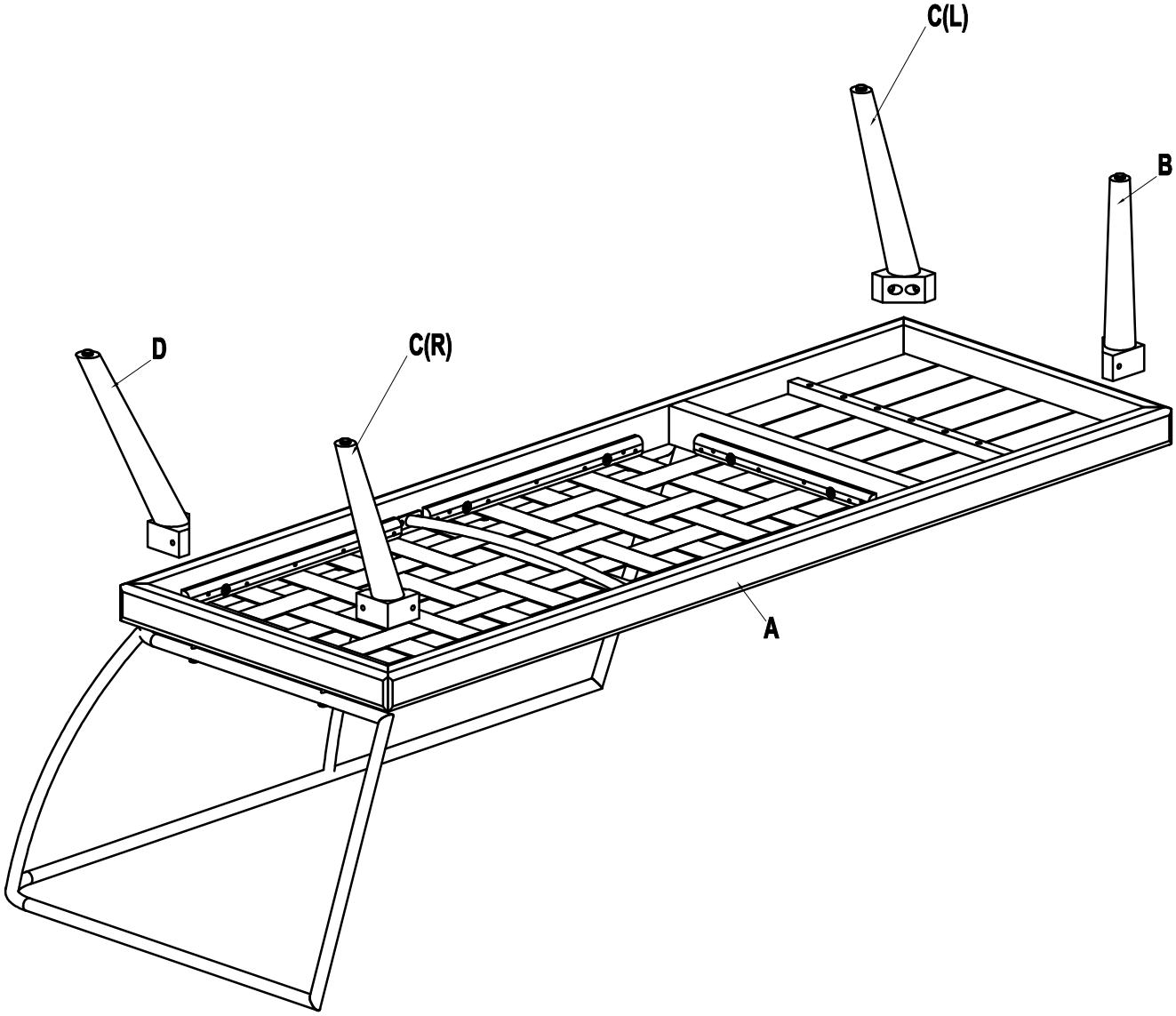
C(L)
B
D
C(R)
A

1

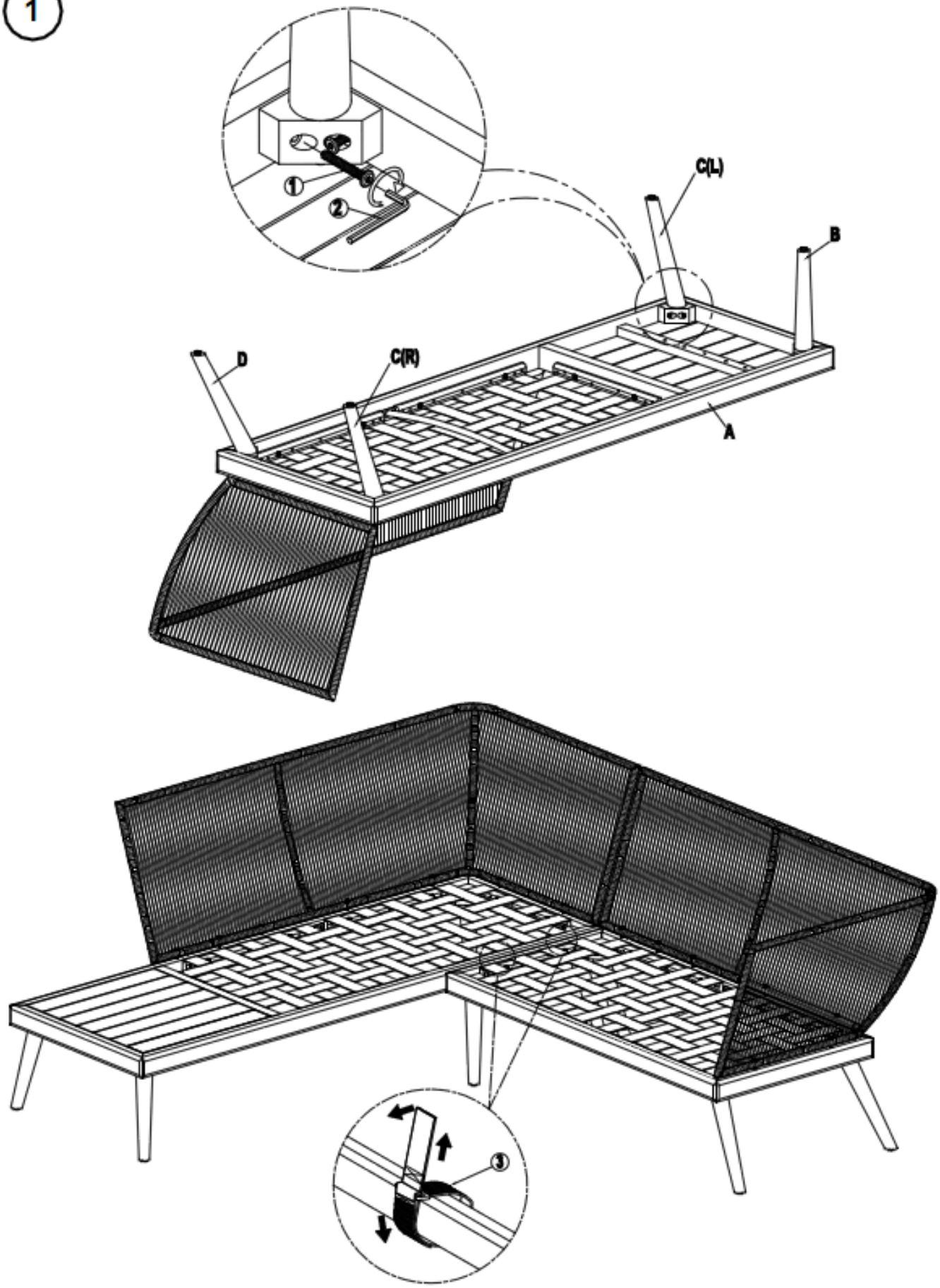

2

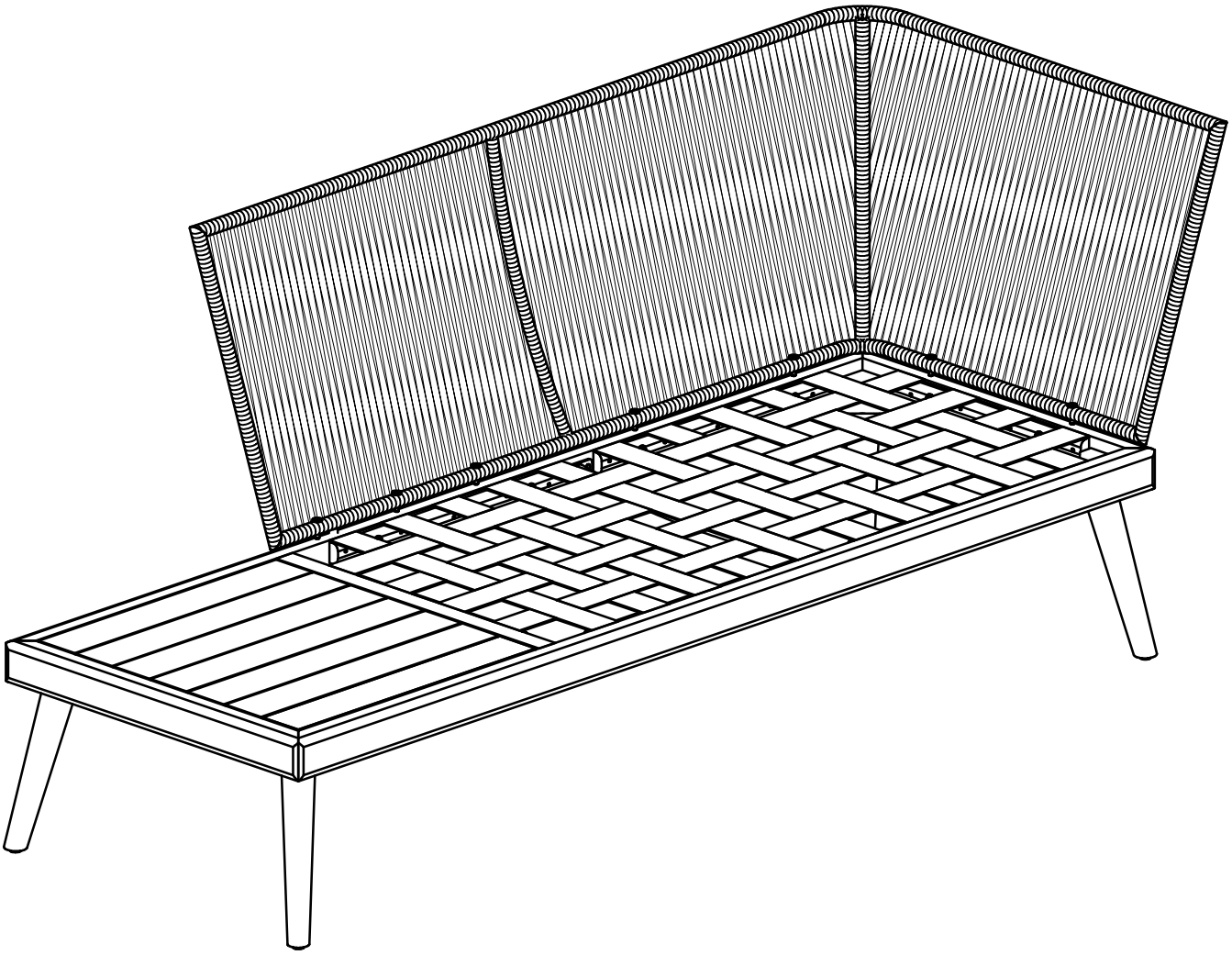

THAT'S ALL FOLKS!

JULIÀ GRUP Furniture Solutions S.L.
B-17616277
Pol. Ind. Bosc d’en Cuca
C / Tallers, 14
17410 Sils SPAIN
info@juliagrup.com