AA1300

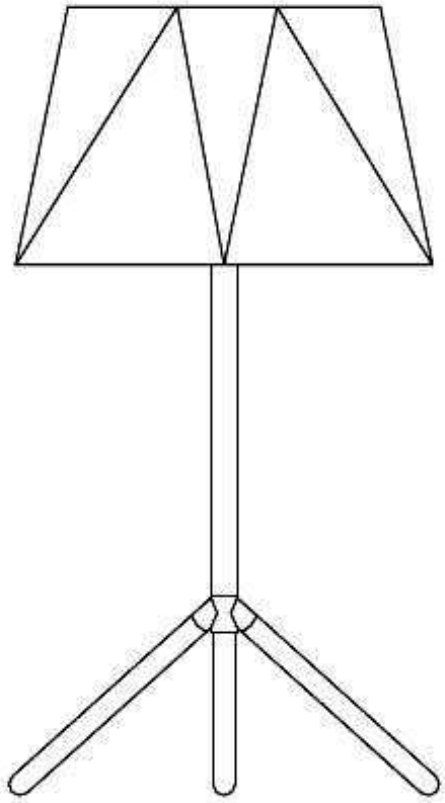

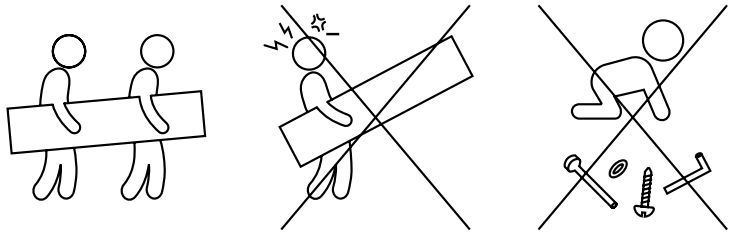

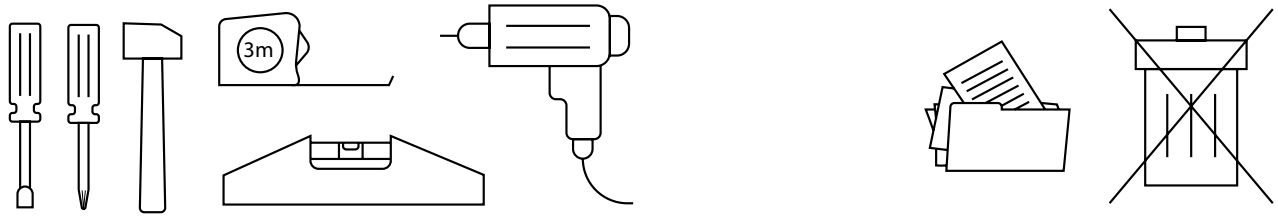
3m

min
max
min
max

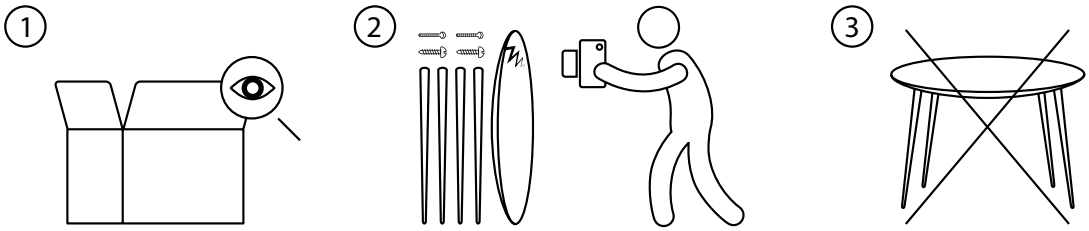
1
2
3

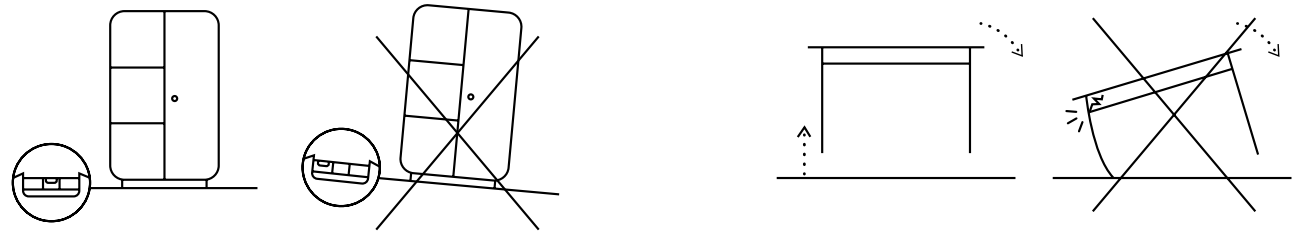

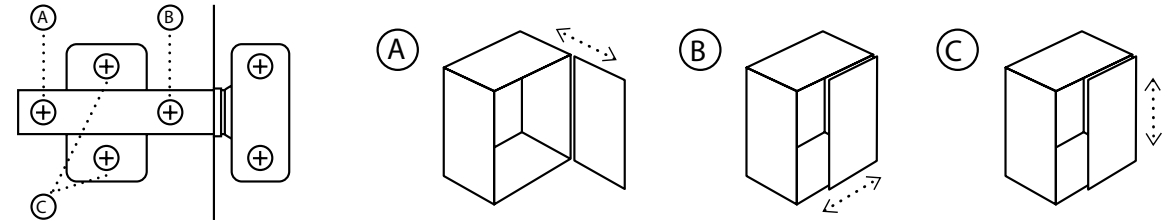
A
B
C
A
B
C

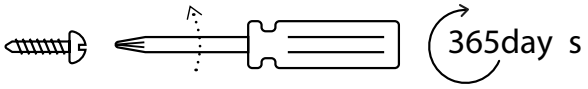
365day s

5 min

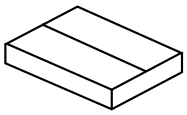

x1

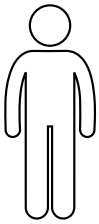

x1

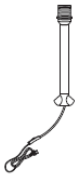

Ax1

Bx3

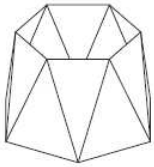

Cx1

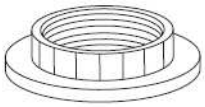

Dx1

1

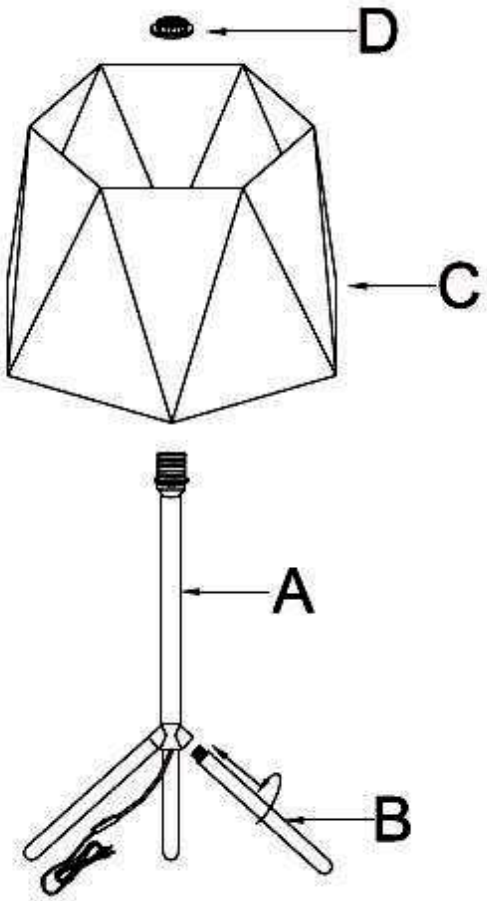

2

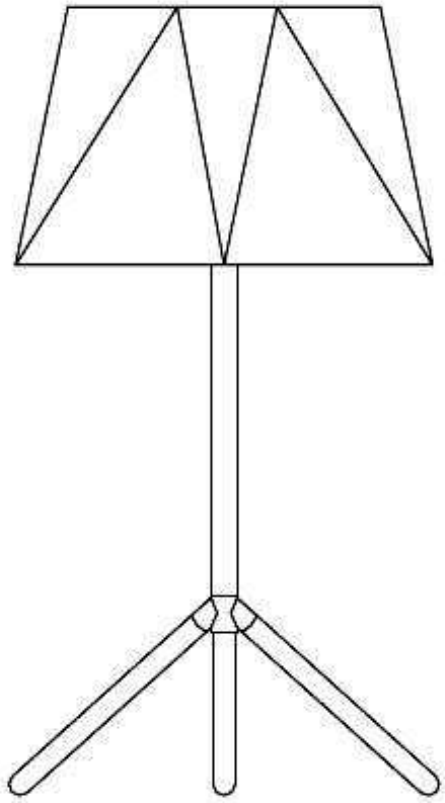

JULIÀ GRUP Furniture Solutions S.L.
B-17616277
Pol. Ind. Bosc d’en Cuca
C / Tallers, 14
17410 Sils SPAIN